1st PRINTING
March 2016

SEGA®

Sega Amusements International Limited.
42 Barwell Business Park, Leatherhead Road, Chessington, Surrey, KT9 2NY. United Kingdom.
Telephone: +44 (0) 208 391 8090 Facsimile: +44 (0) 208 391 8099
email: mailbox@sega.co.uk Web: http://www.segaarcade.com

Sega Corporation
Canal Side Bldg 1-39-9 Higashi-shinagawa Shinagawa-ku, Tokyo, 140-8583, Japan.
Telephone: +81-3-687-7133 Facsimile: +81-3-687-7134

© SEGA

Errors and omissions excepted (E&OE)

MARIO & SONIC 4P OVERHEAD GANTRY

OWNER'S & SERVICE MANUAL

420-0025-02UK

SEGA®

MARIO & SONIC AT THE RIO 2016 OLYMPIC GAMES™ ARCADE EDITION

4 PLAYER OVERHEAD GANTRY & MARQUEE

OWNER'S & SERVICE MANUAL

IMPORTANT

- Before using this product, read this manual carefully to understand the contents herein stated.
- After reading this manual, be sure to keep it near the product or in a convenient place for easy reference when necessary.

BEFORE USING THE PRODUCT, BE SURE TO READ THE FOLLOWING:

To maintain safety:
To ensure the safe operation of this product, be sure to read the following before usage.
The following instructions are intended for the users, operators and the personnel in charge of the operation of the product. After carefully reading and sufficiently understanding the warning displays and cautions, handle the product appropriately. Be sure to keep this manual close to the product or in a convenient place for future reference.

Herein, explanations which require special attention are enclosed with dual lines. Depending on the potentially hazardous degrees, the terms of DANGER, WARNING, CAUTION, etc. are used. Be sure to understand the contents of the displays before reading the text.

⚠ DANGER Indicates that mishandling the product by disregarding this pictograph will cause severe injury or death.

⚠ WARNING Indicates that mishandling the product by disregarding this warning will cause a potentially hazardous situation which can result in death or serious injury.

⚠ CAUTION Indicates that mishandling the product by disregarding this caution will cause a slight hazardous situation which can result in personal injury and/or material damage.

For the safe usage of the product, the following pictographs are used:

Indicates "HANDLE WITH CARE." In order to protect the human body and equipment, this display is attached to places where the Owner's Manual, Serviceman Manual and/or Service Manual should be referred to.

- **Perform work in accordance with the instructions herein stated.** Instructions for work are explained by paying attention to the aspect of accident prevention. Failing to perform work as per the instructions can cause accidents. In the case where only those who have technical expertise should perform the work to avoid hazardous situation, the instructions herein state that the site maintenance personnel should perform such work.
- **Be sure to turn off the power before working on the machine.** To prevent an electric shock, be sure to turn off the power before carrying out any work that requires direct contact with the interior of the product. If the work is to be performed in the power-on status, the Instruction Manual herein always states to that effect.
- **Be sure to ground the Earth Terminal.** (This is not required in the case where a power cord with earth is used.)
- **This product is equipped with the Earth Terminal.** When installing the product, connect the Earth Terminal to the "accurately grounded indoor earth terminal" by using an earth wire. Unless the product is grounded appropriately, the user can be subject to an electric shock. After performing repair, etc. for the control equipment, ensure that the Earth Wire is firmly connected to the control equipment.
- **Ensure that the Power Supply used is equipped with an Earth Leakage Breaker.** This product does not incorporate the Earth Leakage Breaker. Using a power supply which is not equipped with the Earth Leakage Breaker can cause a fire when earth leakage occurs.
- **Be sure to use fuses which meet the specified rating.** (Only for the machines which use fuses.) Using fuses exceeding the specified rating can cause a fire and an electric shock. (Only for the machines which use fuses.)Using fuses exceeding the specified rating can cause a fire and an electric shock.

- **Specification changes (removal of equipment, conversion and addition) not designated by SEGA are not allowed.** The parts of the product include warning labels for safety, covers for personal protection, etc. It is very hazardous to operate the product by removing parts and/or modifying the circuits. Should doors, lids and protective parts be damaged or lost, refrain from operating the product, and contact where the product was purchased from or the office herein stated. SEGA shall not be held responsible for any accidents, compensation for damage to a third party, resulting from the specifications not designated by SEGA.

- Ensure that the product meets the requirements of appropriate electrical specifications. Before installing the product, check for electrical specifications. SEGA products have a nameplate on which electrical specifications are described. Ensure that the product is compatible with the power supply voltage and frequency requirements of the location. Using any electrical specifications different from the designated specifications can cause a fire and an electric shock.

- Install and operate the product in places where appropriate lighting is available, allowing warning labels to be clearly read. To ensure safety for the customers, labels and printed instructions describing potentially hazardous situations are applied to places where accidents can be caused. Ensure that where the product is operated has sufficient lighting allowing the warnings to be read. If any label is peeled off, apply it again immediately. Please place an order with where the product was purchased from or the office herein stated.

- When handling the monitor, be very careful. (Applies only to products with monitors.) Some of the monitor parts are subject to high tension voltage. Even after turning off the power, some portions are still subject to high tension voltage sometimes. Monitor repair and replacement should be performed only by those technical personnel who have knowledge of electricity and technical expertise.

- Be sure to adjust the monitor properly. (Applies only to products with monitors.) Do not operate the product leaving on-screen flickering or blurring as it is. Using the product with the monitor not properly adjusted may cause dizziness or a headache to an operator, a player, or the customers.

- When transporting or reselling this product, be sure to attach this manual to the product.

- *In the case where commercially available monitors and printers are used in this product, only the contents relating to this product are explained herein. Some commercially available equipment has functions and reactions not stated in this manual. Read this manual together with the specific instruction manual of such equipment.*
- *Descriptions herein contained may be subject to improvement changes without notice.*
- *The contents described herein are fully prepared with due care. However, should any question arise or errors be found, please contact SEGA.*

INSPECTIONS IMMEDIATELY AFTER TRANSPORTING THE PRODUCT TO THE LOCATION

Normally, at the time of shipment, SEGA products are in a status allowing for usage immediately after transporting to the location. Nevertheless, an irregular situation may occur during transportation. Before turning on the power, check the following points to ensure that the product has been transported in a satisfactory status.

- Are there any dented portions or defects (cuts, etc.) on the external surfaces of the cabinet?
- Are casters and adjusters damaged?
- Do the power supply voltage and frequency requirements meet with those of the location?
- Are all wiring connectors correctly and securely connected? Unless connected in the correct way, connector connections can not be made accurately. Do not insert connectors forcibly.
- Do power cables have cuts and dents?
- Are all accessories available?
- Can all doors and lids be opened with the accessory keys? Can doors and lids be firmly closed?

INTRODUCTION

This companion manual is intended to provide detailed descriptions together with all necessary information covering the general operation of electronic assemblies, electromechanical, servicing control, spare parts, etc. for the product, "MARIO & SONIC AT THE RIO 2016 OLYMPIC GAMES ARCADE EDITION" 4 PLAYER.

This manual is intended for the owners, personnel managers in charge of operation of this product.
Operate the product after carefully reading and sufficiently understanding the instructions.

In the unlikely event that the product does not function correctly, DO NOT allow anyone other than a technician to touch the internal system. Turn off the power to the machine, making sure to unplug the electrical cord from the outlet, and contact the office listed below or the point-of-purchase for this product.

Use of this product is unlikely to cause physical injuries or damage to property. However, points that require special attention are indicated by bold text, the words "STOP, IMPORTANT or CAUTION" and the symbols below.

STOP IMPORTANT

Indicates important information that, if ignored, may result in the mishandling of the product and cause faulty operation or damage to the product.

⚠ WARNING ⚠ CAUTION

Indicates a warning or caution that, if ignored, may result in the mishandling of the product and cause faulty operation or damage to the product.

Sega Amusements International Limited.

42 Barwell Business Park, Leatherhead Road, Chessington, Surrey, KT9 2NY. United Kingdom.

International Sales:	+44 (0) 208 391 8090	Facsimile:	+44 (0) 208 391 8099
email:	mailbox@sega.co.uk	Web:	http://www.segaarcade.com

Sega Corporation

Canal Side Bldg 1-39-9 Higashishinagawa Shinagawa-ku, Tokyo, 140-8583, Japan.

Telephone:	+81-3-687-7133	Facsimile:	+81-3-687-7134

Sega Total Solutions

42 Barwell Business Park, Leatherhead Road, Chessington, Surrey, KT9 2NY. United Kingdom.

Parts & Service:	+44 (0) 208 391 8060	Facsimile:	+44 (0) 208 391 8096

Play It! Amusements, inc.

252 Beinoris Drive, Wood Dale, IL. 60191, USA

Parts & Service:	+00 (1) 224 265 4287

Definition of 'Site Maintenance Personnel or Other Qualified Individuals

⚠ WARNING

Servicing and maintenance work of the contents herein stated should be performed by the SERVICEMAN stipulated as per IEC Standard. Those who do not have technical expertise and knowledge other than the SERVICEMAN are not allowed to perform the work herein stated. Executing aforementioned work by such non-technical personnel can cause serious accidents that may endanger life.

Parts replacement, maintenance inspections and troubleshooting should be carried out by site maintenance personnel or other qualified professionals. This manual includes directions for potentially dangerous procedures which should only be carried out by professionals with the appropriate specialised knowledge.

The site maintenance personnel or other qualified professionals mentioned in this manual are defined as follows:

Site maintenance personnel:
Individuals with experience in maintaining amusement equipment, vending machines, etc., working under the supervision of the owner/operator of this product to maintain machines within amusement facilities or similar premises by carrying out everyday procedures such as assembly, maintenance inspections, and replacement of units/expendable parts.

Activities to be carried out by site maintenance personnel:
Amusement equipment/vending machine assembly, maintenance inspection and replacement of units/expendable parts.

Other qualified professionals:
Persons employed by amusement equipment manufacturers, or involved in design, production, testing or maintenance of amusement equipment. The individual should have either graduated from technical school or hold similar qualifications in electrical/electronics/mechanical engineering.

Activities to be carried out by other qualified professionals:
Amusement equipment/vending machine assembly, repair/adjustment of electrical/electronic/mechanical parts.

SPECIFICATIONS

Individual Dimensions.

Cabinet:	1.23m (48.4in) [width] x 0.89m (35.1in) [depth] 1.93m (76.0in) [height]
Billboard:	1.21m (47.6in) [width] x 0.49m (19.3in) [depth] 0.44m (17.3in) [height]
Floor Plate:	0.86m (33.9in) [width] x 0.80m (31.5in) [depth] 0.90m (45.4in) [height]
Assembled Dimensions:	1.23m (48.4in) [width] x 1.47m (57.9in) [depth] 2.27m (89.3in) [height]
Weights:	Cabinet 262kg (577.6lb.) Floor 54kg (119lb.) Marquee L 106kg (233.7lb) Marquee R 104kg (229.2lb) Monitor w/mount [35+10kg] 45kg (99.2lb)
Installed 4 Player	
Machine Dimensions:	6.68m (263in.) [W] x 1.62m (63.8in.) [D] x 3.19m (125.6in.) [H]
Machine Weight:	1660Kg
Rating	
Single Machine:	AC240V 1.4A [336W] / AC120V 2.6A [624W]
Marquee:	AC240V 3.2A [768W] / AC120V 6.2A [744W]

Waste of Electrical and Electronic Equipment (WEEE) Statement.

Waste of Electrical and Electronic Equipment (WEEE) Statement.

The WEEE (Waste of Electrical and Electronic Equipment) directive places an obligation on all EU based manufacturers and importers of Electrical and Electronic Equipment (EEE) to ensure waste equipment is disposed of in accordance with the directive at the end of their useful life.

The symbol shown below will be placed on all products manufactured from 13th August 2005, which indicates this product must NOT be disposed of with other normal waste. Upon purchasing any EEE from SEGA Amusements International Ltd. The user accepts responsibility to dispose of their waste equipment by arranging to return it to a designated UK collection point (AATF) or an Approved Exporter (AE) for the correct recycling of waste electrical and electronic equipment.

For more information on Approved Authorised Treatment Facilities (AATF) within the UK please consult the government website www.gov.uk

For users outside of the UK EEE should be disposed of in accordance with the local policy on the recycling of Waste Electrical and Electronic Equipment.

Battery Recycling Statement.

The EC Directive on Batteries and Accumulators (2006/66/EC) aims to minimise the impact of batteries on the environment and encourage the recovery of the materials they contain. To achieve increased collection and recycling of waste batteries, the Directive places 'producer responsibility' obligations on manufacturers and importers of portable, industrial and automotive batteries.

The symbol shown below will be on all equipment fitted with batteries from 26th September 2008 and indicates they must NOT be disposed of with other normal waste. Instead, it is the user's responsibility to dispose of used batteries by arranging to return them to a designated collection point for the correct recycling.

For more information about where you can send your waste batteries for recycling contact your local authority office.

REGISTERED IN ENGLAND REGISTERED NO. 1711515

REGISTERED OFFICE: BLOCK C 42 BARWELL BUSINESS PARK, CHESSINGTON, SURREY KT9 2NY

TABLE OF CONTENTS

INTRODUCTION iv

1 HANDLING PRECAUTIONS 1

2 PRECAUTIONS REGARDING INSTALLATION LOCATION 4

2-1 LIMITATIONS OF USAGE 5

2-2 OPERATION AREA 6

3 PRECAUTIONS REGARDING PRODUCT OPERATION 8

3-1 BEFORE OPERATION 8

PART DESCRIPTIONS 9

5 ACCESSORIES 11

6 ASSEMBLY AND INSTALLATION 12

6-1 INSTALLING THE DISPLAY MOUNTS 15

6-2 INSTALLING THE OVERHEAD DISPLAYS 17

6-3 INSTALLING THE CAMERAS 20

6-4 CABINET POSITIONING 21

6-5 ATTACHING THE ARTWORK TO THE DISPLAYS 22

6-6 ATTACHING THE WIRE COVER BKTS 24

6-7 CONNECTING THE OVERHEAD DISPLAYS (HDMI) 26

6-8 CONNECTING THE OVERHEAD CAMERAS 27

6-9 CONNECTING THE POWER CABLES 28

6-10 CONNECTING THE BILLBOARD LIGHTING CABLES 29

6-11 APPLYING THE WIRE COVERS 31

6-12 ATTACHING THE L&R TOWER ARTWORK 32

6-13 APPLYING POWER & OTHER CONNECTIONS 33

6-14 TURNING ON THE POWER 35

7 PRECAUTIONS WHEN MOVING THE MACHINE 36

8 GRAPHICS DISPLAY 40

8-1 SAFETY PRECAUTIONS WHEN HANDLING THE MONITOR 40

9 PERIODIC INSPECTION 46

10 TROUBLESHOOTING 48
10-1 TROUBLESHOOTING (WHEN NO ERROR MESSAGE IS SHOWN) 48
11 RASBERRY PI CONTROLLER 51
12 DESIGN-RELATED PARTS 53
13 PARTS LIST 54
14 PARTS & SERVICE CONTACT INFORMATION 76
15 WIRE COLOUR CODE TABLE 77
16 WIRING DIAGRAMS 78

1 HANDLING PRECAUTIONS

When installing or inspecting the machine, be very careful of the following points and pay attention to ensure that the player can enjoy the game safely.
Non-compliance with the following points or inappropriate handling running counter to the cautionary matters herein stated can cause personal injury or damage to the machine.

⚠ WARNING

Before performing work, be sure to turn the power off. Performing the work without turning the power off can cause an electric shock or short circuit. In cases where work should be performed in the status of power on, this manual always states to that effect.

To avoid an electric shock or short circuit, do not plug in or unplug quickly.

To avoid an electric shock, do not plug in or unplug with a wet hand.

Do not expose power cords or earth wires on the surface, (floor, passage, etc.) If exposed, the power cords and earth wires are susceptible to damage. Damaged cords and wires can cause an electric shock or short circuit.

To avoid causing a fire or an electric shock, do not put things on or damage the power cords.

When or after installing the product, do not unnecessarily pull the power cord. If damaged, the power cord can cause a fire or an electric shock.

In case the power cord is damaged, ask for a replacement through where the product was purchased from or the office herein stated. Using the cord as is damaged can cause fire, an electric shock or leakage.

This product MUST be Earthed. Inappropriate Earthing can cause an electric shock.

Be sure to use fuses meeting the specified rating. Using fuses exceeding the specified rating can cause a fire or an electric shock.

Be sure that connections such as IC BD are made properly. Insufficient insertion can cause an electric shock.

Specification changes, removal of equipment, conversion and/or addition, not designated by SEGA are not permitted.

Failure to observe this may cause a fire or an electric shock. Non-compliance with this instruction can have a bad influence upon physical conditions of the players or the onlookers, or result in injury during play.

SEGA shall not be held responsible for damage, compensation for damage to a third party, caused by specification changes not designated by SEGA.

Do not perform any work or change parts not listed in this manual. Doing so may lead to an accident.

If you need to perform any work not listed in this manual, request work from the office indicated in this manual or the point of purchase, or inquires for details.

Be sure to perform periodic maintenance inspections herein stated.

STOP IMPORTANT

For the IC board circuit inspections, only the use of a logic tester is recommended. Using a Multi Tester or General Purpose Tester may result in damage to IC Circuits. Static electricity from your body may damage some electronics devices on the IC board. Before handling the IC board, touch a grounded metallic surface so that the static electricity can be discharged.

Some parts are not designed and manufactured specifically for this game machine. The manufacturers may discontinue, or change the specifications of such general-purpose parts. If this is the case, SEGA cannot repair or replace a failed game machine whether or not a warranty period has expired.

CONCERNING THE STICKER DISPLAY

This SEGA product has stickers attached describing the product manufacture No. (Serial No.) and Electrical Specifications. It also has a Sticker describing where to contact for repair and for purchasing parts.
When inquiring about or asking for repairs, mention the Serial No. and Name of Machine indicated on the Sticker. The Serial Number indicates the product register. Identical machines could have different parts depending on the date of production. Also, improvements and modifications might have been made after the publication of this manual. In order to ensure you order the correct parts, mention the Serial No. when contacting the applicable places.

CONCERNING WARNING DISPLAYS

This SEGA product has warning displays on stickers, labels and/or printed instructions adhered/attached to or incorporated in the places where a potentially hazardous situation could arise. The warning displays are intended for accident prevention for customers and for avoiding hazardous situations relating to maintenance and servicing work. Some portions of the cabinet contain high voltage and may cause accidents if touched. When performing maintenance, be very careful of the warning displays. It is especially important that any complex repair and replacement work not mentioned herein should be performed by those technical personnel who have knowledge of electricity and technical expertise.
In order to prevent accidents, caution any customer ignoring the warnings to cease and desist immediately.

VIDEO GAME-INDUCED SEIZURES (VGS) AND PHOTOSENSETIVE EPILEPSY (PSE)

This SEGA product has warning displays on stickers which outline the risk of epilepticform and photosensetive seizures. These warning displays on stickers are applied close in proximity of the device which may promote symptoms of either video game-induced seizures or epilepsy. The warning displays are supplied in several languages and form part of the Installation kit supllied with this product. It is standard practice for the English version of this label to be applied during manufacture, however it is especially important for the operator to apply the same said label in the lanuguage of the country of operation.

STICKER DISPLAY

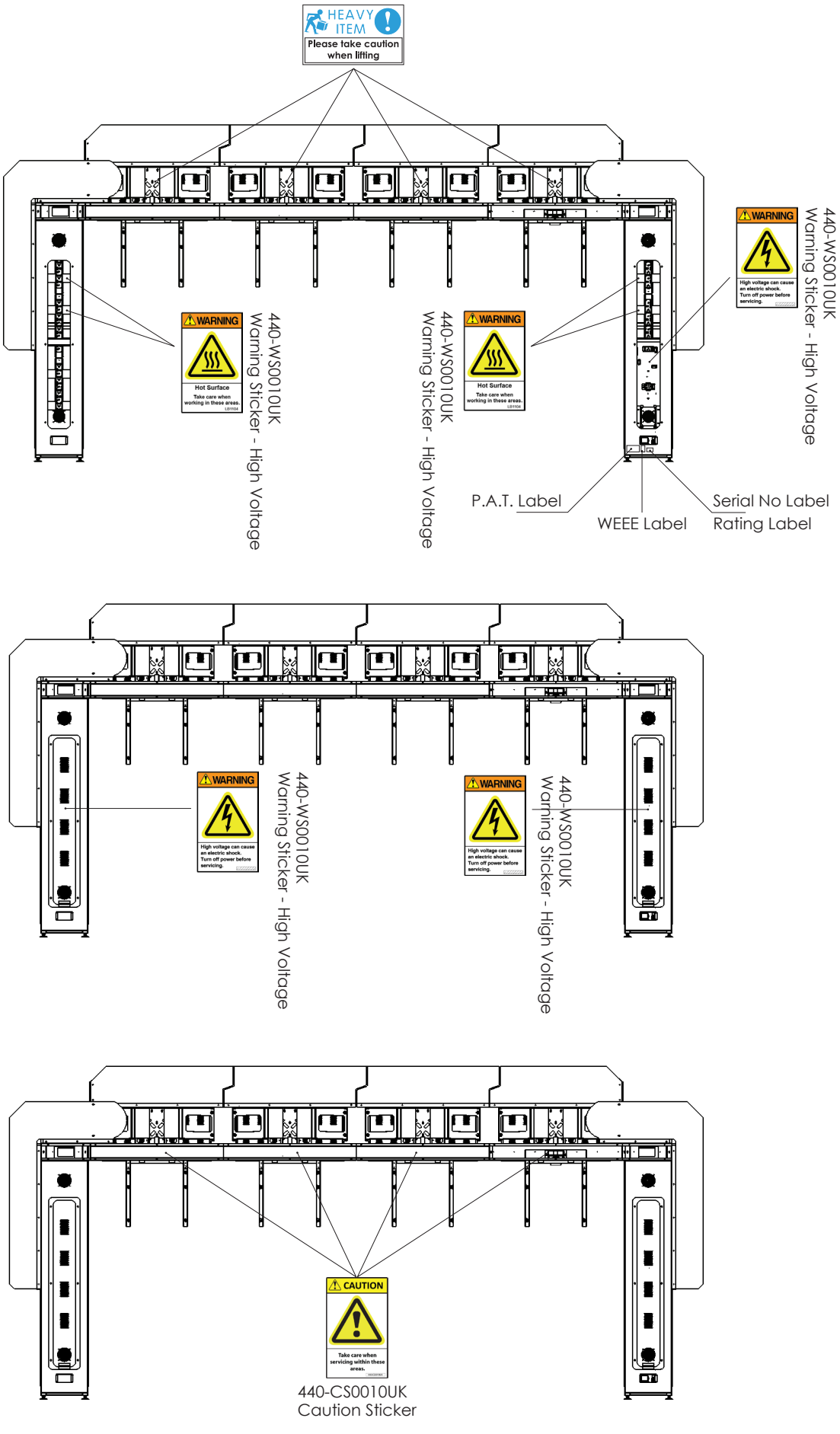

2 PRECAUTIONS REGARDING INSTALLATION LOCATION

STOP IMPORTANT

- This product is a companion for the 4 player version of the MARIO & SONIC at the RIO 2016 OLYMPIC GAMES arcade edition.
- This is not a "Standalone" unit!
- Do not use this product with any other product except for the one which is attend.
- Secure a suitable area to assemble safely.
- Use a minimum of 2 people with the aid of lifting equipment.

⚠ WARNING

This product is an indoor machine. Do not install it outside. Even indoors, avoid installing in places mentioned below so as not to cause a fire, electric shock, injury and/or malfunction.

Places subject to rain or water leakage, or places subject to high humidity in the proximity of an indoor swimming pool and/or shower, etc.

Places subject to direct sunlight, or places subject to high temperatures in the proximity of heating units, etc.

Places filled with inflammable gas or vicinity of highly inflammable/volatile chemicals or hazardous matter.

Dusty places.

Sloped surfaces.

Places subject to any type of violent impact.

Vicinity of anti-disaster facilities such as fire exits and fire extinguishers.

Areas where the temperature exceeds the applicable temperature (ambient temperature) range of 5 to 30 degrees centigrade.

STOP IMPORTANT

Securing a safe area for operation as described in this manual will ensure safe operation for players and observers.

SEGA shall not be held responsible for damage or compensation for damage to a third party, resulting from the failure to observe this instruction.

2-1 LIMITATIONS OF USAGE

⚠ WARNING

Be sure to check the Electrical Specifications. Ensure that this product is compatible with the location's power supply, voltage, and frequency requirements. A label describing Electrical Specifications is attached to the product. Non-compliance with the Electrical Specifications can cause a fire and electric shock.

This product requires a breaker and earth mechanism as part of the location facilities. Using the product without these can cause a fire and electric shock.

Ensure that the indoor wiring for the power supply is rated at 15 A or higher (AC single phase 100 V ~ 120 V area), and 7 A or higher (AC 220 V ~ 240 V area). Non-compliance with the Electrical Specifications can cause a fire and electric shock.

Be sure to use an independent power supply equipped with an earth leakage breaker. Using a power supply without an earth leakage breaker can cause an outbreak of fire if a power surge occurs.

Putting many loads on one electrical outlet can cause generation of heat and a fire resulting from overload.

When using an extension cord, ensure that the cord is rated at 15 A or higher (AC 100 V ~ 120 V area) and 7 A or higher (AC 220 V ~ 240 V area). Using a cord rated lower than the specified rating can cause a fire and electric shock.

2-2 OPERATION AREA

IMPORTANT

- This product will fit through a standard doorway. Use two people to advance the Upright Towers through a doorway.
- Do not attempt to move the product by pushing or pulling on the plastic parts. This may damage the product and my cause personal injury.
- Always use a minimum of two people to maneuver the Upright Towers.

⚠ WARNING

- For the operation of this machine, secure a minimum area of 7.08 m (W) x 2.97m (D). These dimensions are necessary to enable the customer to walk around the machine and also to provide adequate ventilation. In such an event, if a player strikes his or her head, a serious accident may occur, so be sure to secure the minimum area around the machine specified in this manual.
- Be sure to provide sufficient space specified in this manual. Do not allow objects to block the ventilation ports. It can cause generation of heat and a fire.
- SEGA shall not be held responsible for damage or compensation for damage to a third party, resulting from the failure to observe this instruction.
- If the machine does not fit through the entryway to the installation location, do not disassemble it without first consulting the instructions. The machine should only be disassembled in accordance with the instructions listed in this manual; do not attempt to disassemble it in any other way. Specific tools and adjustment procedures are required to assemble and disassemble the mechanical parts. Attempting to assemble or disassemble the machine without consulting the instructions may result in accidents during assembly/ disassembly and electric shock, short circuits, and/or personal injury during operation. If the machine still does not fit through the entryway after following the procedures in this manual, contact your retailer or the office listed in this manual.
- If the machine is still too large to fit through the entryway after following the procedures listed in this manual, do not tip the machine on its side. Attempting to transport the machine while it is tipped on its side may cause accidents. It may also damage or warp parts of the machine, resulting in accidents during operation.
- If the entrance is too narrow, do not tilt the product carelessly. It may be necessary to carry the product through narrow doorways. If all the product weight is put on the adjusters at one side only, there could be damage or deformation, causing serious accidents such as workers getting caught underneath.

OPERATION AREA

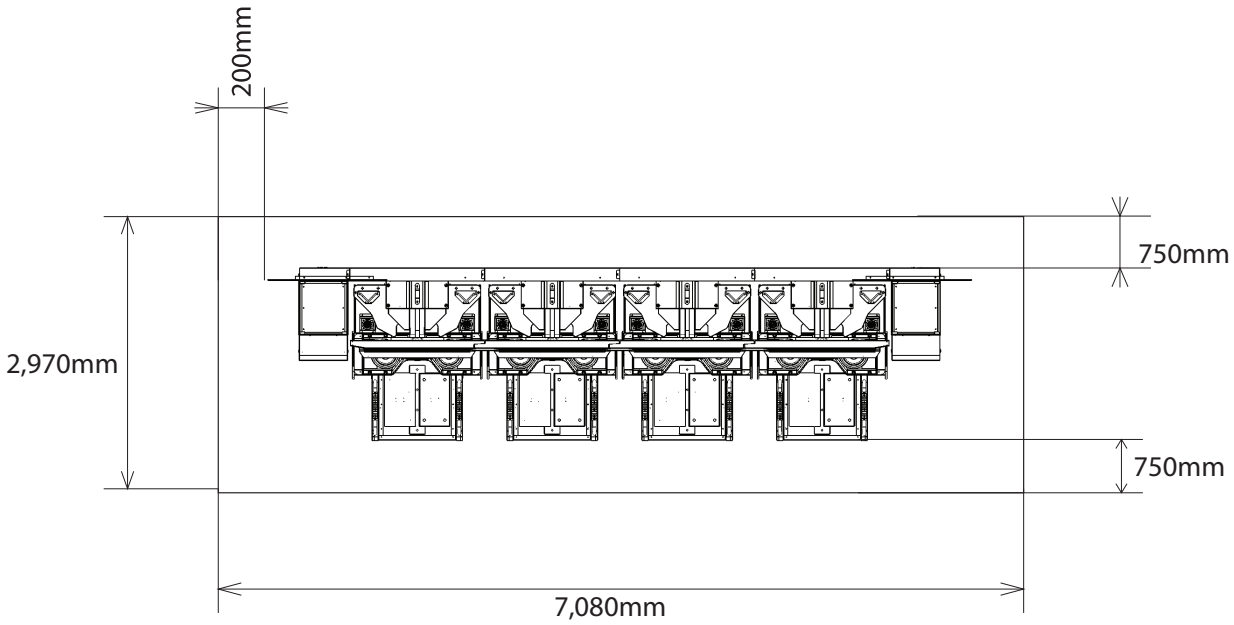

3 PRECAUTIONS REGARDING PRODUCT OPERATION

In order to prevent accidents and inappropriate behaviour, please check the following before operating the product.

3-1 BEFORE OPERATION

⚠ WARNING

- **To ensure maximum safety for the players and the customers, ensure that where the product is operated has sufficient lighting to allow any warnings to be read. Operation under insufficient lighting may result in customers bumping into each other or the product causing injury.**
- **Check if all the Leg Adjusters are in contact with the surface. (The casters should be raised approximately 5mm from the floor) If they are not the cabinet will move and may cause damage to property or injury to a player or observer.**
- **Do not place any heavy items on this product. Doing so may result in injury or damage to the product.**
- **Do not climb on this product. Climbing on this product may result in injury or product damage. When checking the upper proportions of this product, always use a step/step ladder.**
- **To avoid electric shock, always check each door or service hatch for damage and make sure that they are fitted correctly. Never operate this product with doors or service hatches removed.**
- **Do not place any of the following objects on top of the product, nearby the product or hang them from the ceiling in close proximity to the product as doing so may result in an electric shock, short circuit or damage to parts.**
- **Flower vases, flower pots, cups, glasses, water tanks, cosmetics and/or any receptacle/container/vessel containing liquid or chemicals.**
- **Be sure to perform appropriate adjustment of the display (LCD Screen). For operation of this machine, do not leave monitor's flickering or deviation as is. Failure to observe this can have a bad influence upon the players' or the customers' physical conditions.**
- **It is suggested to ensure a space allowing the players who may feel sick while playing the game to take a rest.**
- **Check that the product is located on a level surface. If the product is placed upon an uneven surface it will rock and can trap feet or fingers between gaps.**

4 PART DESCRIPTIONS

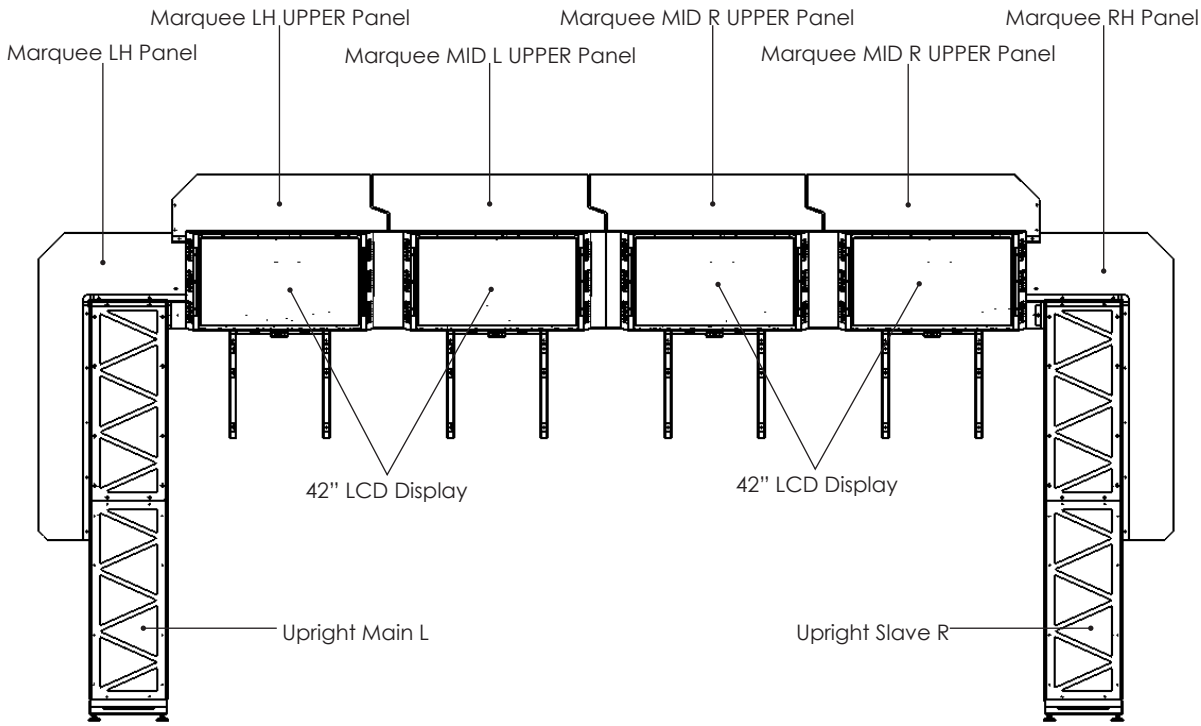

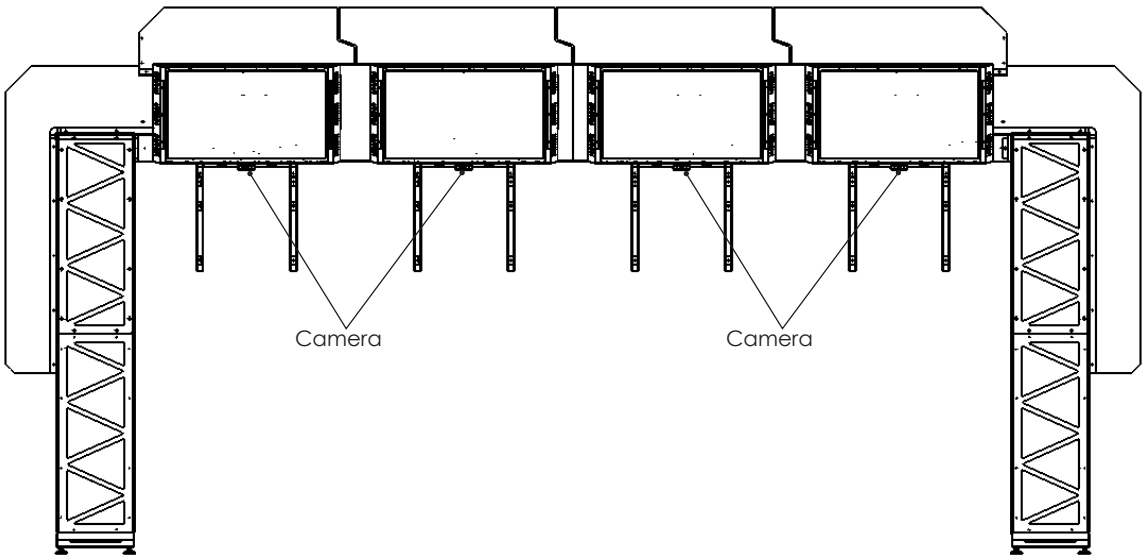

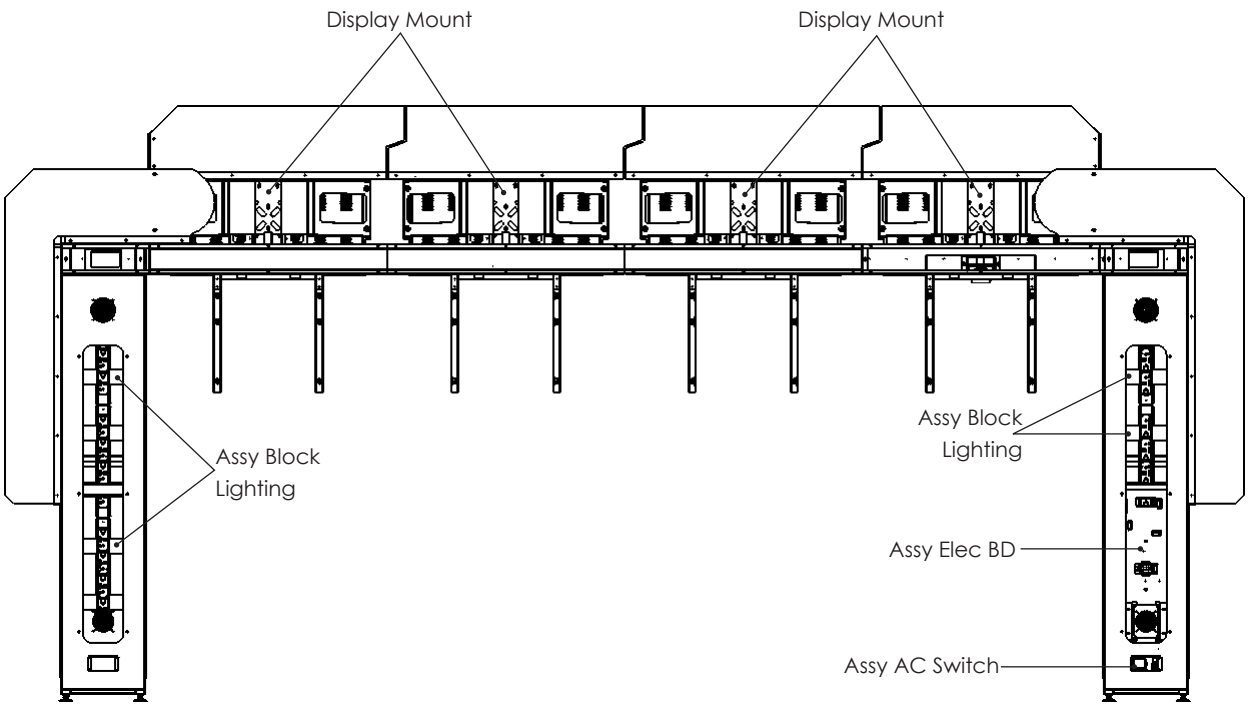

Items	Width	Depth	Height
MSR MARQUEE	6,677mm (262.87 in)	887mm (34.92 in)	3204mm (126.14 in)
INSTALLED WEIGHT	Appox 400Kg (881.84lb)		

5 ACCESSORIES

Confirm that the accessories listed in the table below are present when setting up the product.
Accessories marked “Spare” in the note column are consumable items but included as spares.

Parts not labeled with part numbers are yet to be assigned. Be sure to handle all parts with care, as some parts are not available for purchase separately.

Part name/Part no.	Description/Use etc.	Qty
OWNERS MANUAL 420-0025-02UK	This Manual 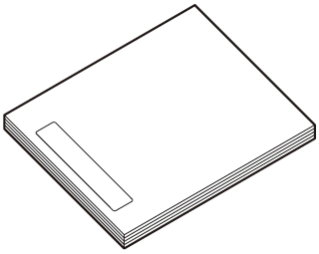	1
POWER LEAD EU UK US	Power cord for your region 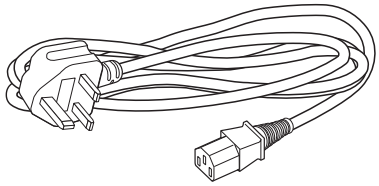	1
4 WAY NETWORK HUB	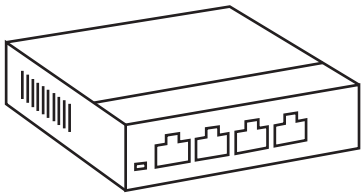	1
FLOOR ARTWORK MAT		1

6 ASSEMBLY AND INSTALLATION

⚠ WARNING

- Perform assembly work by following the procedure herein stated. Failure to comply with the instructions can cause electric shock.
- Perform assembling as per this manual. Since this is a complex machine, incorrect assembling can cause an electric shock, machine damage and/or improper functioning as per specified performance.
- When assembling, be sure to use additional help from another person(s). Depending on the assembly work, there are some cases in which working by one person alone can cause personal injury or parts damage.
- Adhere strictly to all of the work procedures stipulated in this document. If two or more workers are working at the same time, exercise special caution. If sequences are carried out erroneously, accidents can result. There might also be cases in which the assembly cannot be completed.
- Pay special attention to the surroundings when a multiple number of workers are working at the same time. There is always the danger that a worker might be injured. In assembly and installation of this product, there are procedures in which a stepladder is used, procedures in which heavy objects are attached, and procedures involving connection of a rated power supply of 10 amperes. Carelessness in doing work could lead to grave injuries and even fatalities.
- Ensure that connectors are accurately connected. Incomplete connections can cause electric shock.
- This work should be carried out by the site maintenance personnel or other qualified professionals. Work performed by non-technical personnel can cause a severe accident such as electric shock. Failing to comply with this instruction can cause a severe accident such as electric shock to the player during operation. If no one with proper technological expertise is available, request service from the office indicated in this document or the point of purchase so as to ensure safety.
- Be careful not to damage the wires. Damaged wires may cause electric shock or short circuit or present a risk of fire.
- Do not leave power cable or earth lines exposed over passageways. Exposure could lead to damage, electric shock or short circuit. Wherever wiring has been laid out on a floor surface, use a wiring protection cover. [Wiring diameter: Power cable, approx. 10 mm – 14 mm]
- Persons who connect indoor power supplies must be qualified electricians. Do not allow anyone without proper qualifications to make such connections. Otherwise there could be electric shock.
- Provide power cables for connecting the indoor power supply to the product. The rating of the power cable must be at least 15 amperes. The cable must conform to this requirement and also be of sufficient length to enable the indoor power supply to be connected to the product without difficulty. Use of a cable that does not meet the requirements can result in a fire or electric shock. The recommended dimensions of the power cable terminal for the product use are a hole diameter of 4.5 mm and width of 8 mm.

⚠ WARNING

- For the sake of safety and workability, use 3 core coaxial CE/UL approved cables for the power cables (provided).
- When inserting or removing a connector, always hold it by its main part. If you hold it by anything else while doing so, the connections between wire and connector terminal fixtures could be damaged; and there could be a short circuit or fire. There could also be poor connectivity.
- Make sure that all the adjusters are resting on the floor. The cabinet may move and cause an accident if the adjusters are not laid out properly.
- Whenever any fasteners (e.g. screws, nuts) have been lost, always use replacement fasteners with proper dimensions as specified in this manual. If fasteners of any other dimensions are used, it could cause damage and/or separation of parts that result in secondary accidents.
- Be careful when aligning, attaching or mounting parts so that your head, hands, fingers, etc., do not get caught in anything. If two or more workers are working at the same time, exercise special caution. Failure to be cautious could result in accidental bone fractures or amputation. Check the surroundings carefully before proceeding.
- When connecting wires inside the cabinet, there may be instances in which the indoor lighting does not reach that location. Have a flashlight or other auxiliary lighting equipment on hand. If wires are connected carelessly, there could be an accidental short circuit, fire, etc.
- When tightening bolts and screws, ensure that other parts are suspended properly and bolts and screws are fastened tightly. Be sure to take accident prevention measures such as having another worker support parts. If a part drops or topples over during this work, a serious accident may result.

⚠ CAUTION

- Support and hold parts in place securely and fasten them with screws and/or bolts. Use two workers, one to support the part and another to fasten it in place. If a part is not supported securely, it might fall down, resulting in an accident.
- Wear appropriate work clothing so that work can be performed safely. Use gloves and safety shoes to prevent accidents or injuries.
- When installing a wire protection cover over a floor, use a material shaped so that no one passing by will stumble over it. Using a material that could be stumbled over might lead to an accidental fall.
- Be careful in handling plastic parts. Be sure not to tighten screws or nuts too tightly. If such parts are exposed to excessive loads or impact, they might become damaged, resulting in fragments or cracks that could cause accidental injury.

TOOLS NECESSARY FOR WORK

Phillips Screwdriver (for M4)	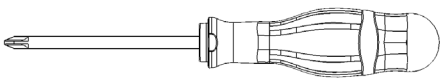
Torx T20 Security Driver	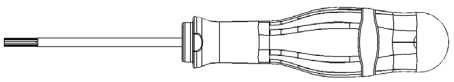
Spanner / Adjustable spanner (24mm)	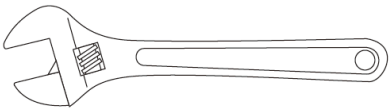
Key Master	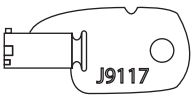
Step or Stool	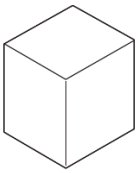
Socket Wrench (13mm)	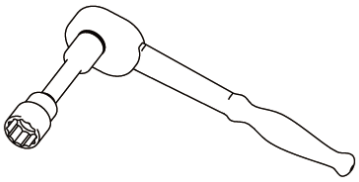
Hex Key	

6-1 INSTALLING THE DISPLAY MOUNTS

⚠ WARNING

- **Installation of the Displays and Display Mounts are carried out at height. These components are heavy. Use a minimum of 4 people and or lifting equipment such as a winch lift. Also prepare ladders to work from. When working off ladders be sure that they are stable within their environment.**
- **Do not attempt to install the Displays or Display mounts without the use of ladders, lifting equipment or additional help. Trying to install this equipment without aid may result in injury and or damage to equipment.**

1 Locate parts required to assemble 4x HOLDER LED ASSY MOUNTS. *4x LED ASSY MOUNT (MSR-5032UK), 4x BKT MARQUEE SUPPORT (MSR 5055UK) and 4x BKT WIRE COVER SUPPORT (MSR-5057UK).*

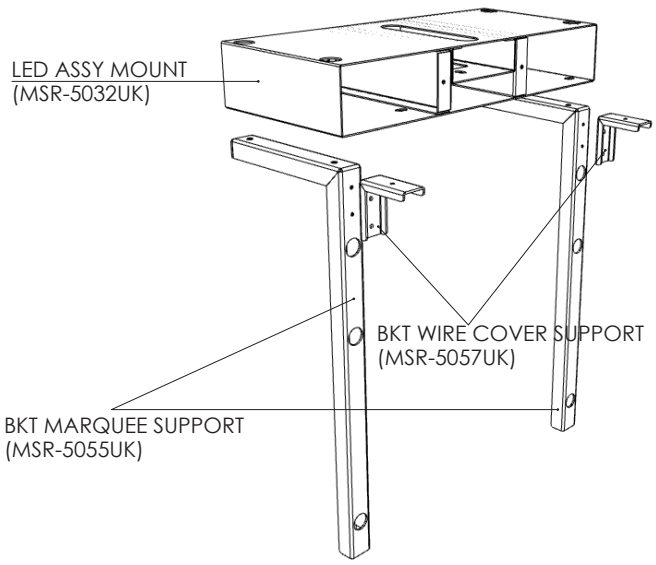

2 Apply the LED ASSY MOUNT and both BKT WIRE COVER SUPPORTS to the BKT MARQUEE SUPPORT using the fixings shown.

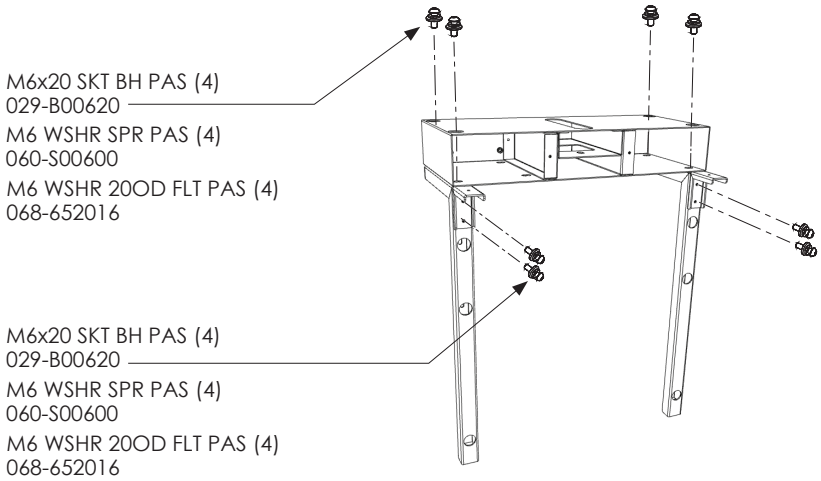

3 Attach the BKT MARQUEE SUP STRETCHER to the top of each cabinet as shown and secure using fixings M6x20 SKT BH PAS (2), M6 WSHR SPR PAS (2) & M6 WSHR 20OD FLT PAS (2)

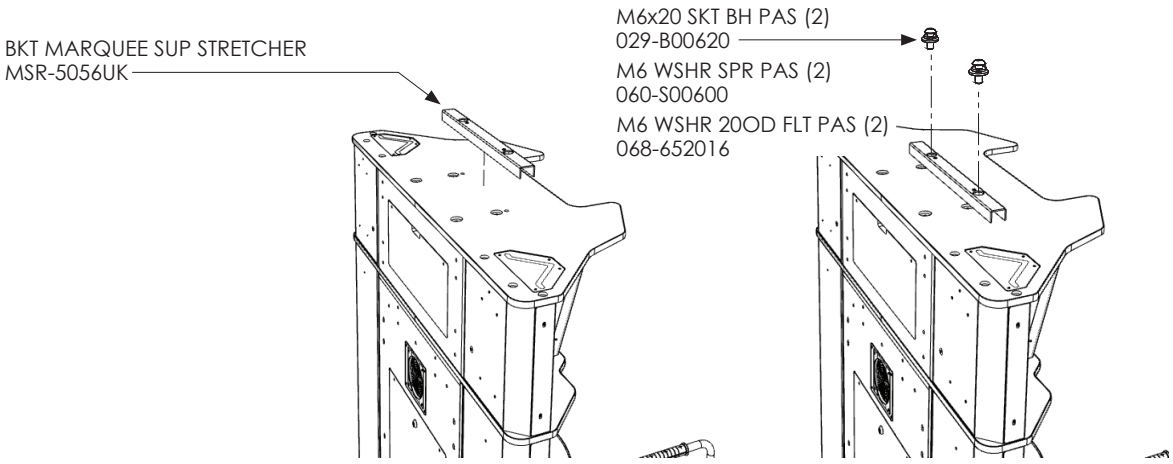

4 Offer the now assembled LED DISPLAY MOUNT to the top of each cabinet and over the BKT MARQUEE SUPPORT STRETCHER. Once in place secure using the fixings 6 sets of fixings shown.

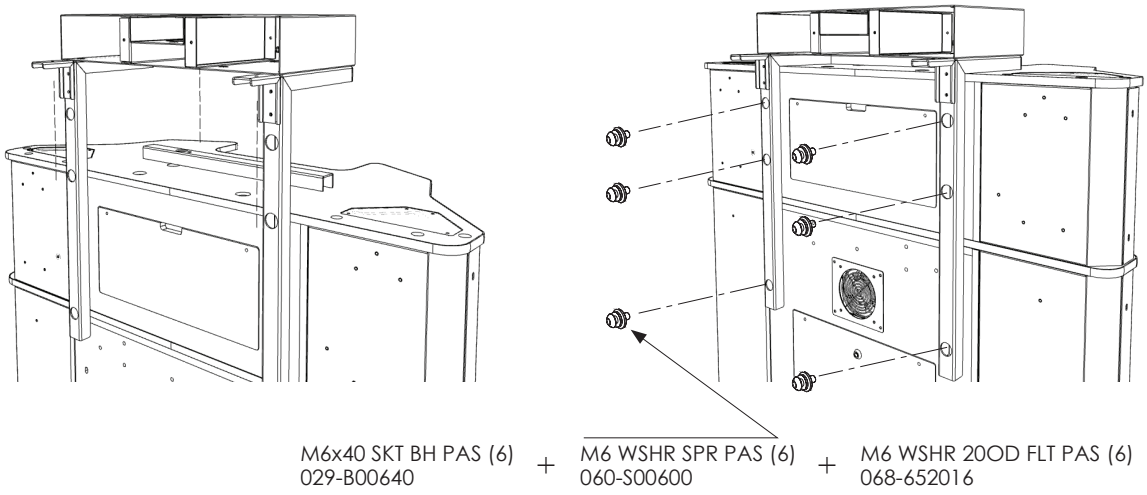

5 Finally secure the upper section of the LED SUPPORT BKT by fitting (2) M6x40 SKT BH PAS Bolts in locations shown. Proceed to carry out operations 1 to 5 on the remaining 3 cabinets..

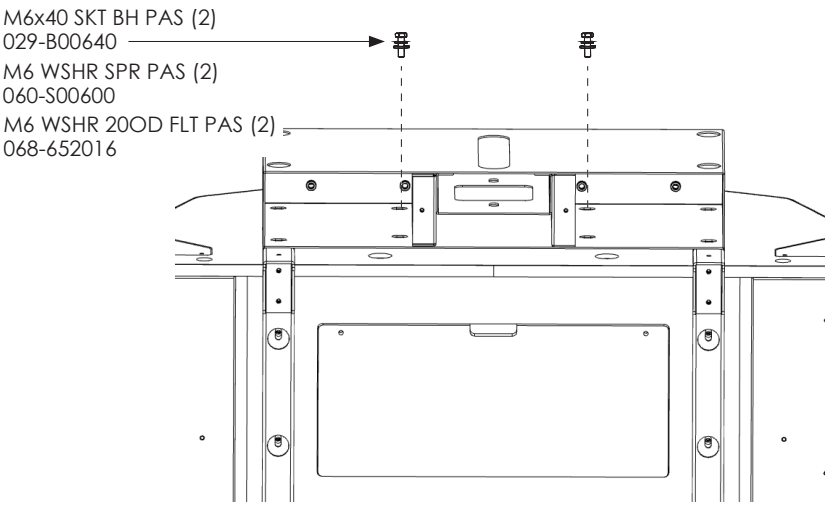

6-2 INSTALLING THE OVERHEAD DISPLAYS

⚠ WARNING

- **Installation of the Displays and Display Mounts are carried out at height. These components are heavy. Use a minimum of 4 people and or lifting equipment such as a winch lift. Also prepare ladders to work from. When working off ladders be sure that they are stable within their environment.**
- **Do not attempt to install the Displays or Display mounts without the use of ladders, lifting equipment or additional help. Trying to install this equipment without aid may result in injury and or damage to equipment.**

1 Locate (2) BKT LED ASSY SUPPORT (MSR-5122UK) and secure them either side of the MOUNT LED ASSY CABI (MSR-5121UK) using (4) M8x20 SKT CAP PAS bolts and associated washers.

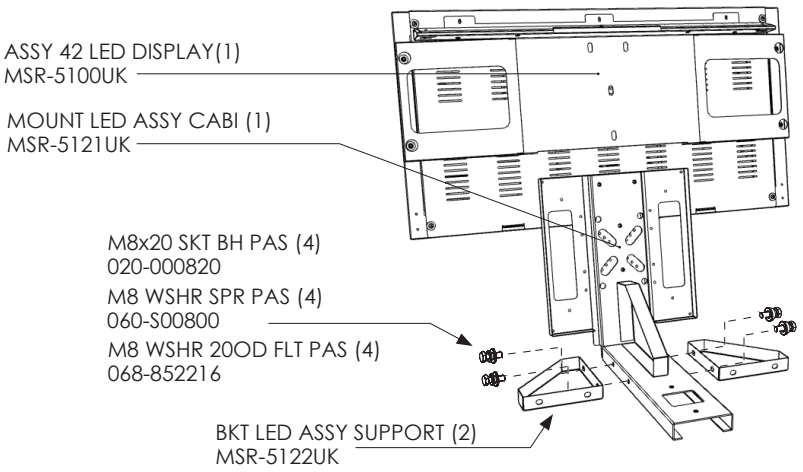

2 Slide the ASSY 42 LED DISPLAY over and onto the MOUNT LED ASSY CABI and secure using (4) M8x20 SKT CAP PAS screws and associated washers.

* Take Care not to damage harnessing when applying the 42 LED DISPLAY to the MOUNT LED ASSY CABI

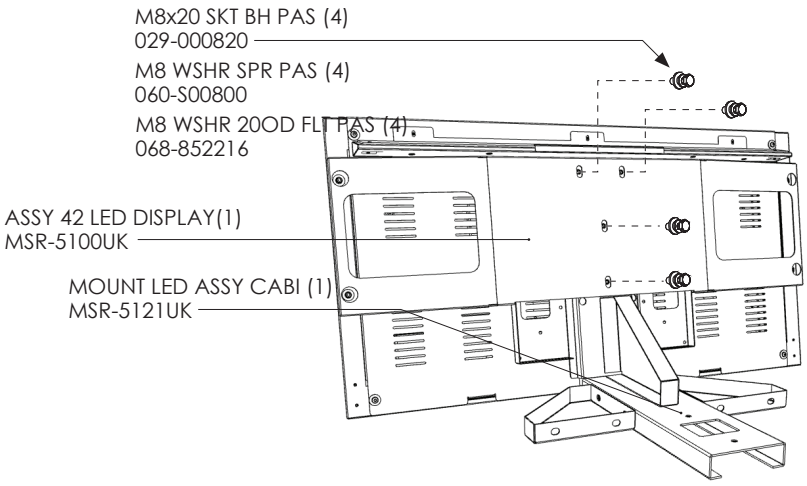

3 Each Display is assigned to a different cabinet. The differences are the length of the HDMI cable. Displays for cabinets 1 and 2 house a 5m HDMI cable whereas displays for cabinets 3 and 4 house a 10m HDMI cable. The identification tag is applied to the HDMI cable of each display.

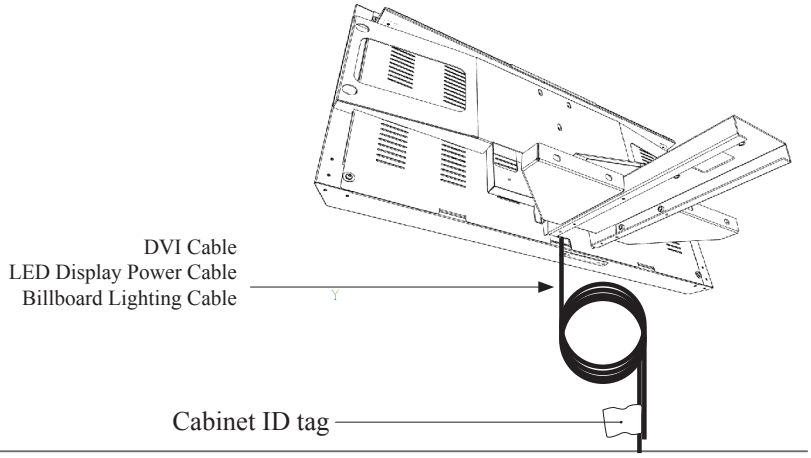

4 Using a minimum of 4 people and or lifting equipment. Offer the ASSY 42 LED DISPLAY assigned to cabinet 1 up to cabinet 1 and slide it carefully into the LED ASSY MOUNT. Take care not to damage any harnessing when applying the ASSY 42 LED DISPLAY to the CABINET.

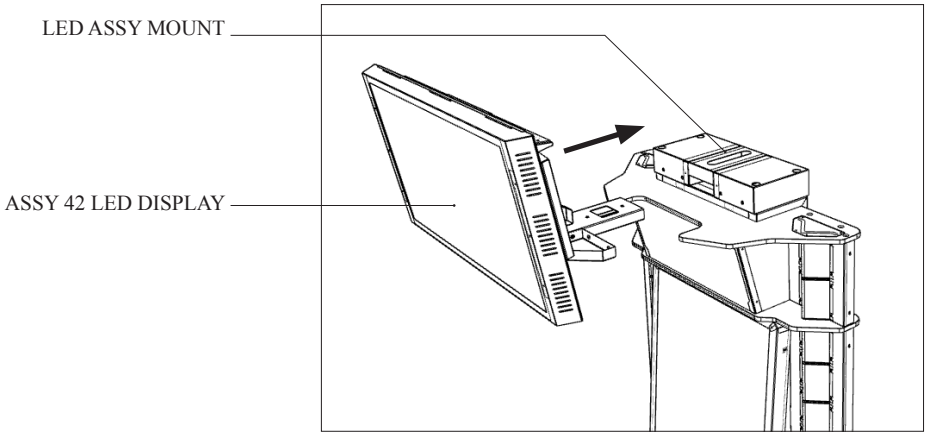

5 Once the ASSY 42 LED DISPLAY is fully in position, secure to the LED ASSY MOUNT using (6) M8x20 SKT BH PAS and associated washers.

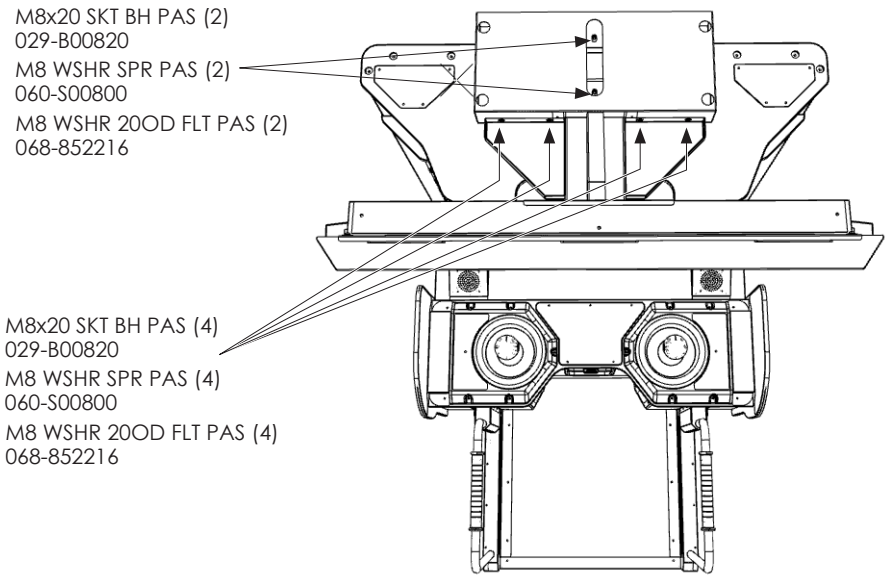

6 Carefully feed the HMDI cable, LED DISPLAY POWER cable and the BILLBOARD LIGHTING cable from the ASSY 42 LED DISPLAY in through the DISPLAY MOUNT and out to the rear of the cabinet.

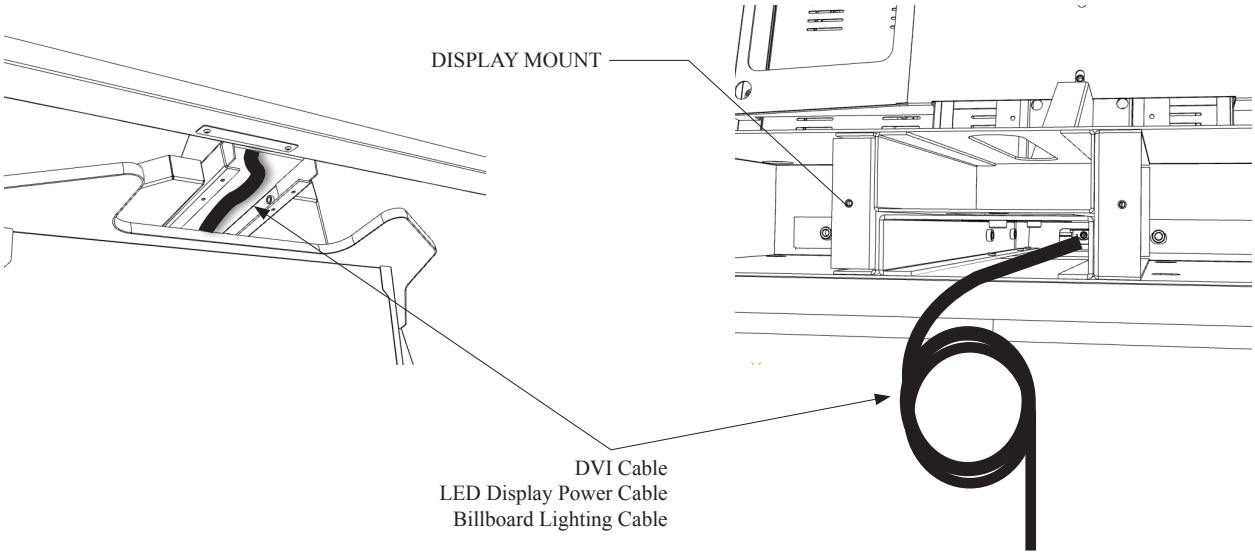

7 Repeat steps 1 to 6 on the remaining 3 cabinet.

6-3 INSTALLING THE CAMERAS

1 Locate the ASSY CAMERA and apply it to the underside of the MOUNT ASSY LED CABI as shown.

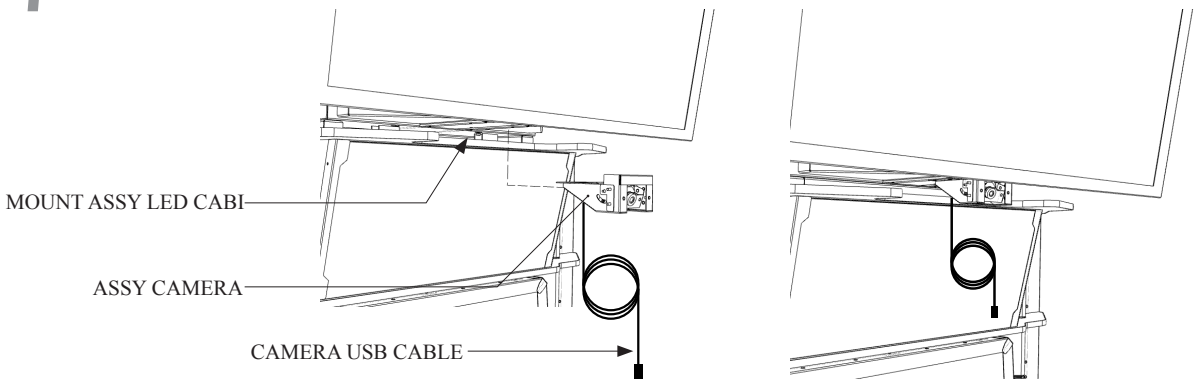

2 Secure the ASSY CAMERA in place by using (4) M4x16 SKT BH PAS and associated washers..

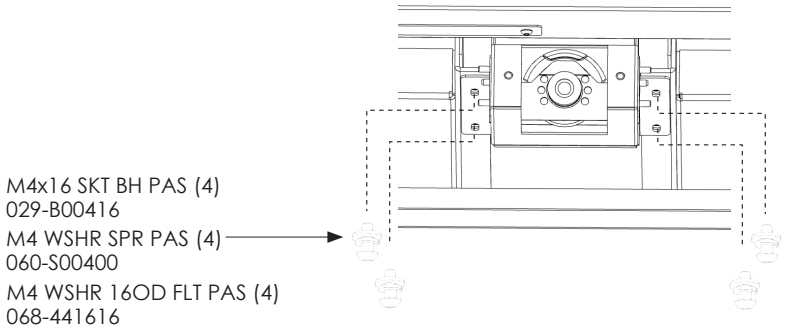

3 Feed the CAMERA USB cable in through the DISPLAY MOUNT along with the harnesses from the ASSY 42 LED DISPLAY out to the rear of the Cabinet.

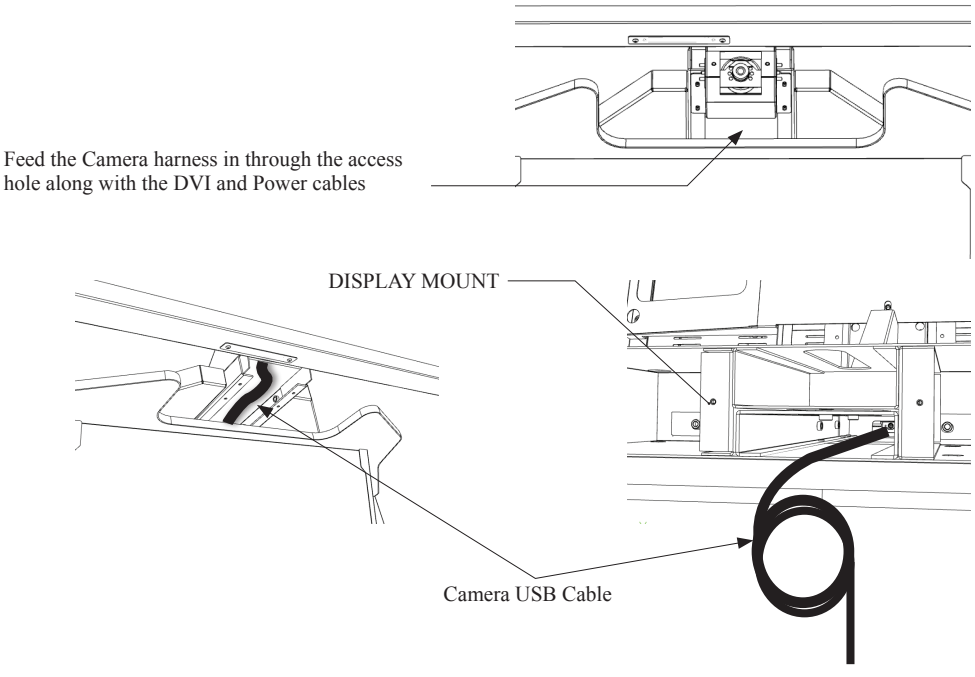

4 Repeat Steps 1 to 3 in this process to apply all three ASSY CAMERAS to the Cabinets.

6-4 CABINET POSITIONING

1 To secure an area for operation (Please refer to Section 2 of this manual for dimensions). Space the cabinets so that the cabinets are evenly spaced (50mm). Align both towers to the outside, with the Main Tower (POWERED) standing to the Left Hand Side looking from the front.

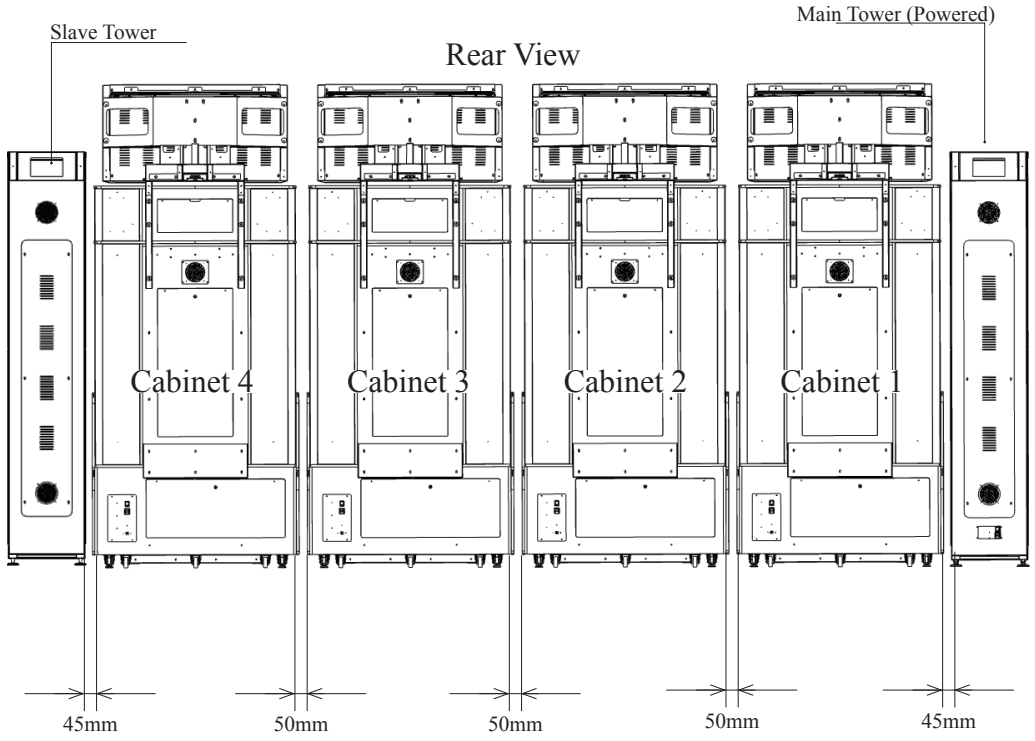

2 Once all cabinets are in place. Secure them by lowering the Leg levellers to raise the Casters 5mm from the floor. (Please refer to Section 6-1 of the Mario & Sonic at the 2016 Rio Olympic Games Owners and Service Manual)

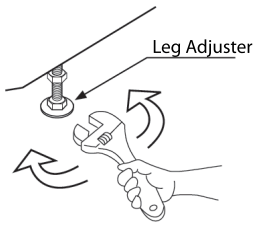

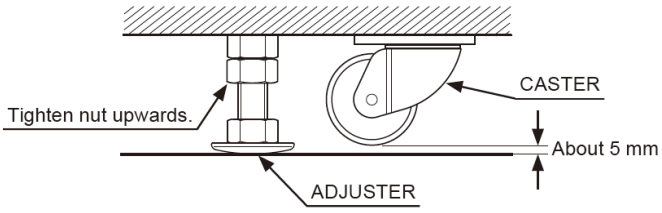

6-5 ATTACHING THE ARTWORK TO THE DISPLAYS

⚠ WARNING

- **Do not attempt to install the Artwork without the use of ladders. Trying to install this equipment without aid of ladders may result in injury and or damage to equipment.**

1 The ARTWORK is attached to the BILLBOARD BKTS which are secured to the top of each overhead display and along both towers.

2 Each piece of artwork is assigned to individual cabinets. For the purpose of illustration we will attach the Artwork to the first cabinet (Cabinet 1). All other pieces of artwork in this process are fitted in the same way.

3 Shown below is the artwork and the cabinets they are assigned to.

Cabinet 1

Cabinet 2

Cabinet 3

Cabinet 4

4 Using 2 people and a set of sturdy Step Ladders, remove the (4) M4x12 SKT BH PAS Machine screws from the MARQUEE BKT UPPR. Remove the MARQUEE BKT UPPR.

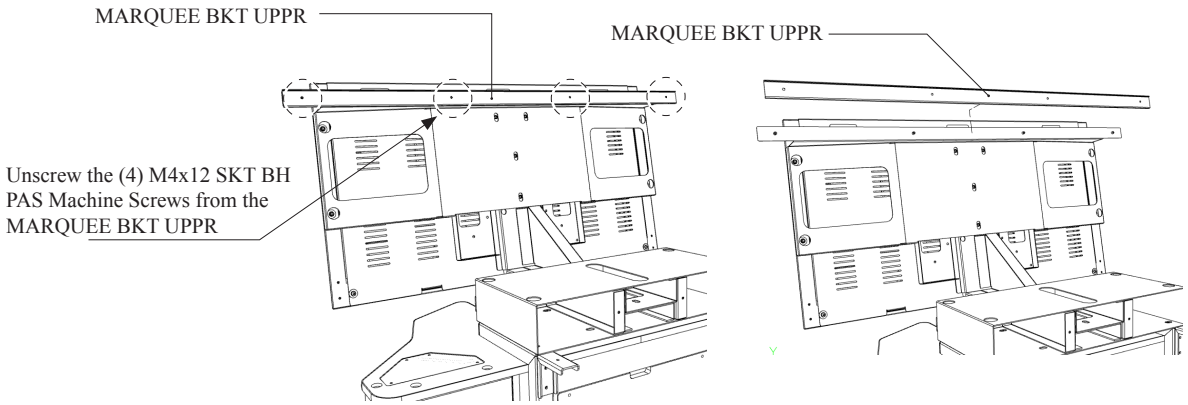

5 Offer Artwork #1 (MSR-5026UK) to Cabinet 1. Replace the MARQUEE BKT UPPR and re-secure using the (4) M4x12 SKT BH PAS Machine Screws.

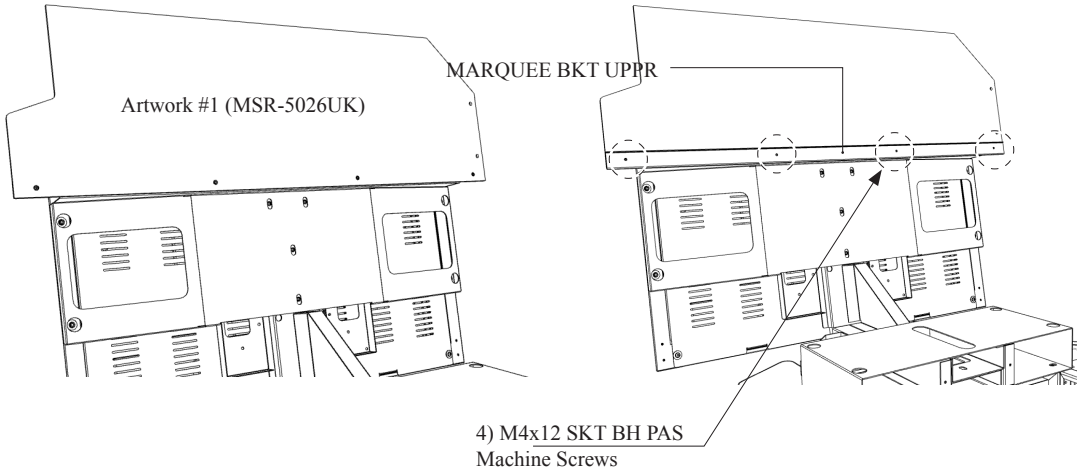

6 Repeat processes 1 to 6 until all four cabinet have the artwork fixed as shown below.

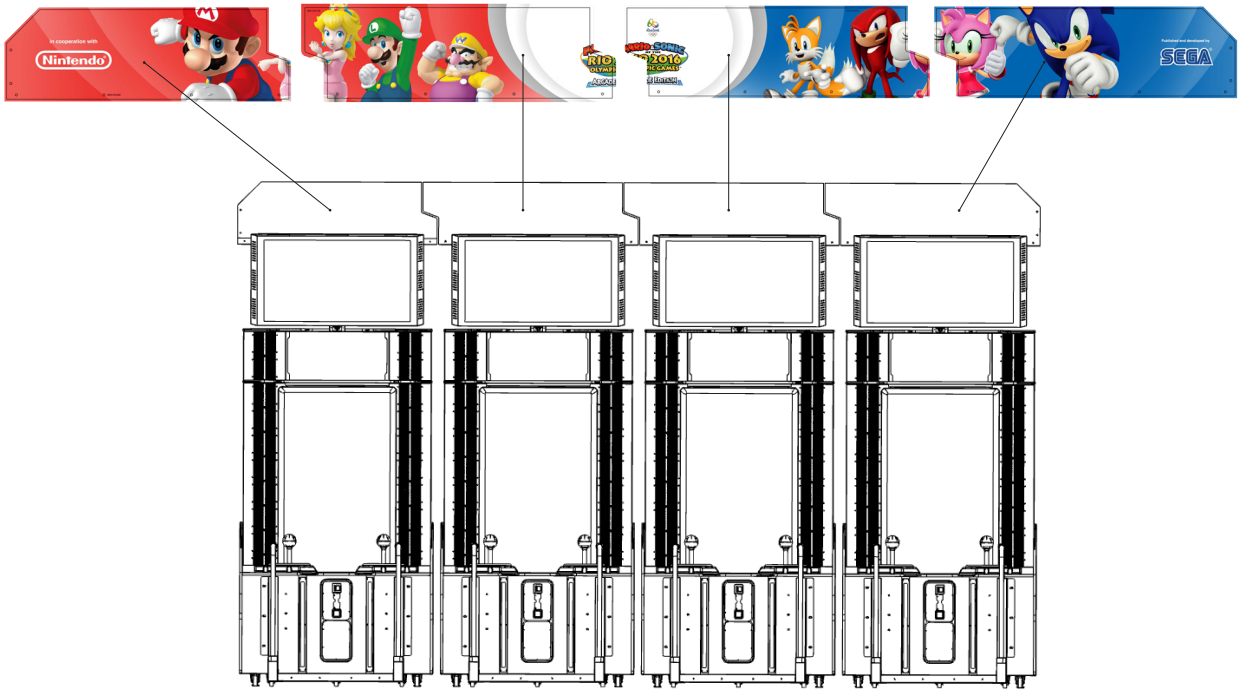

6-6 ATTACHING THE WIRE COVER BKTS

The wire covers connects and spans the full width of all four cabinets and outer towers. Please attach all wire covers before connecting and routing the harnesses.

IMPORTANT!
Each of the WIRE COVER BKTS are the same for each cabinet with one exception. The WIRE COVER BKT for the CABINET 2 houses a PI CPU. Please allocate the correct BKT to the correct Cabinet.

1 Attach BKT LH WIRE COVER REAR (MSR-5047XUK) to the LH TOWER using the fixings as shown. Once the BKT has been attached, pull through the connecting harness.

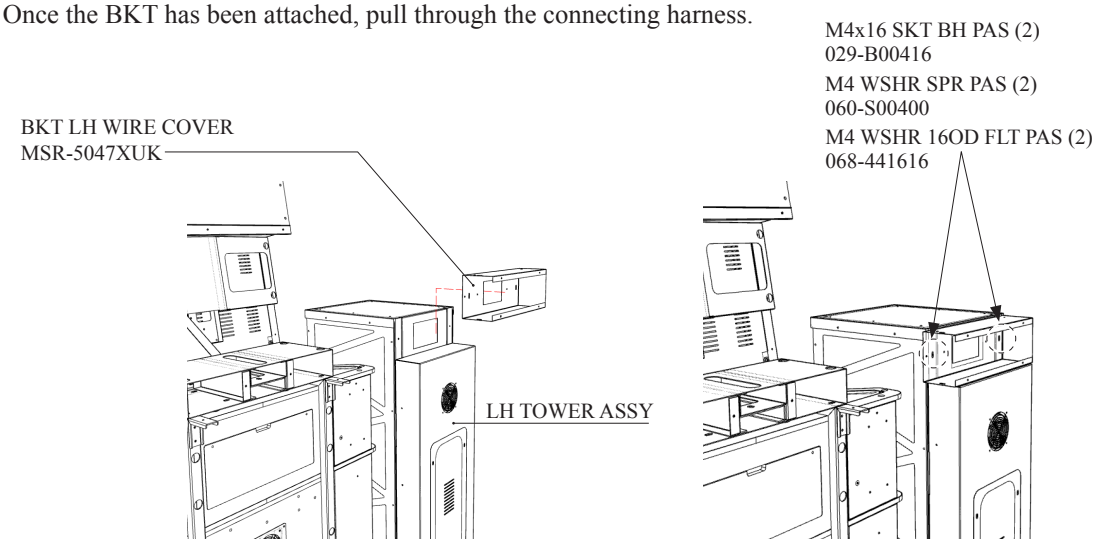

2 Attach BKT MID WIRE COVER REAR (MSR-5045XUK) to Cabinet 1 and the BKT LH WIRE COVER REAR using the (6) set of fixings as shown.

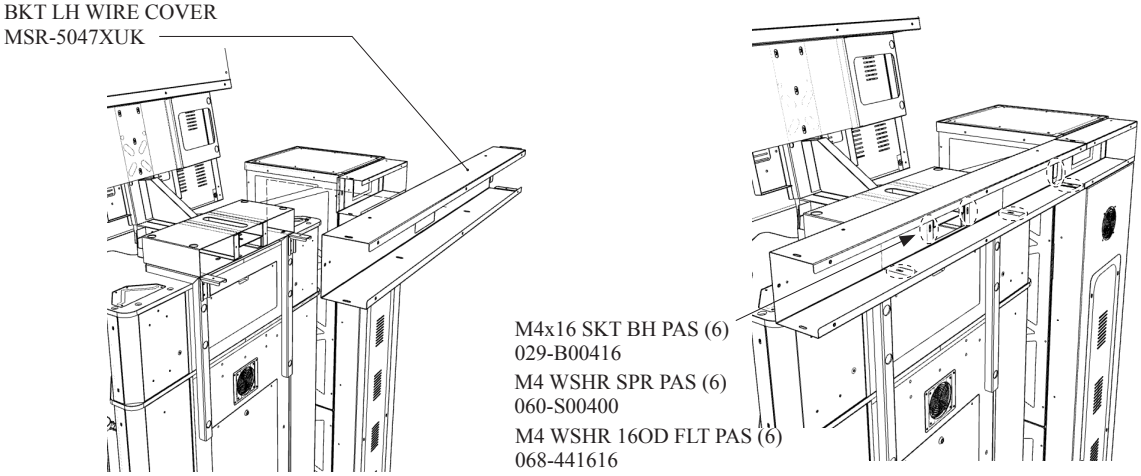

3 Attach BKT MID WIRE COVER REAR (MSR-5054XUK) to Cabinet 2. (Cabinet 2 BKT MID WIRE COVER REAR has the PI CPU attached to it). using the fixings as shown.

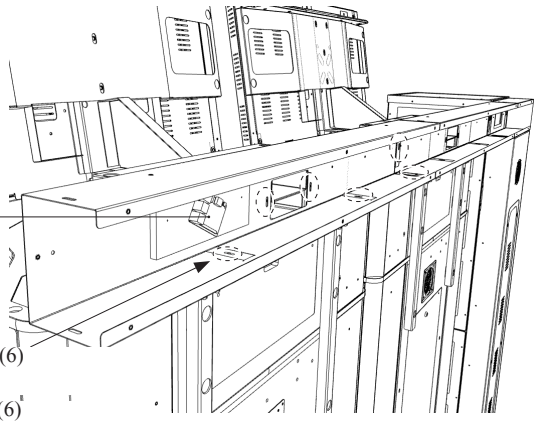

M4x16 SKT BH PAS (6)
029-B00416
M4 WSHR SPR PAS (6)
060-S00400
M4 WSHR 16OD FLT PAS (6)
068-441616

4 Attach BKT MID WIRE COVER REAR (MSR-5054XUK) to Cabinet 3 and Cabinet 4 in the same way as the BKTS attached in Steps 2 and 3, until all BKT WIRE COVERS have been fitted. Finally apply the BKT RH WIRE COVER REAR to the RH TOWER as instructed in STEP 1.

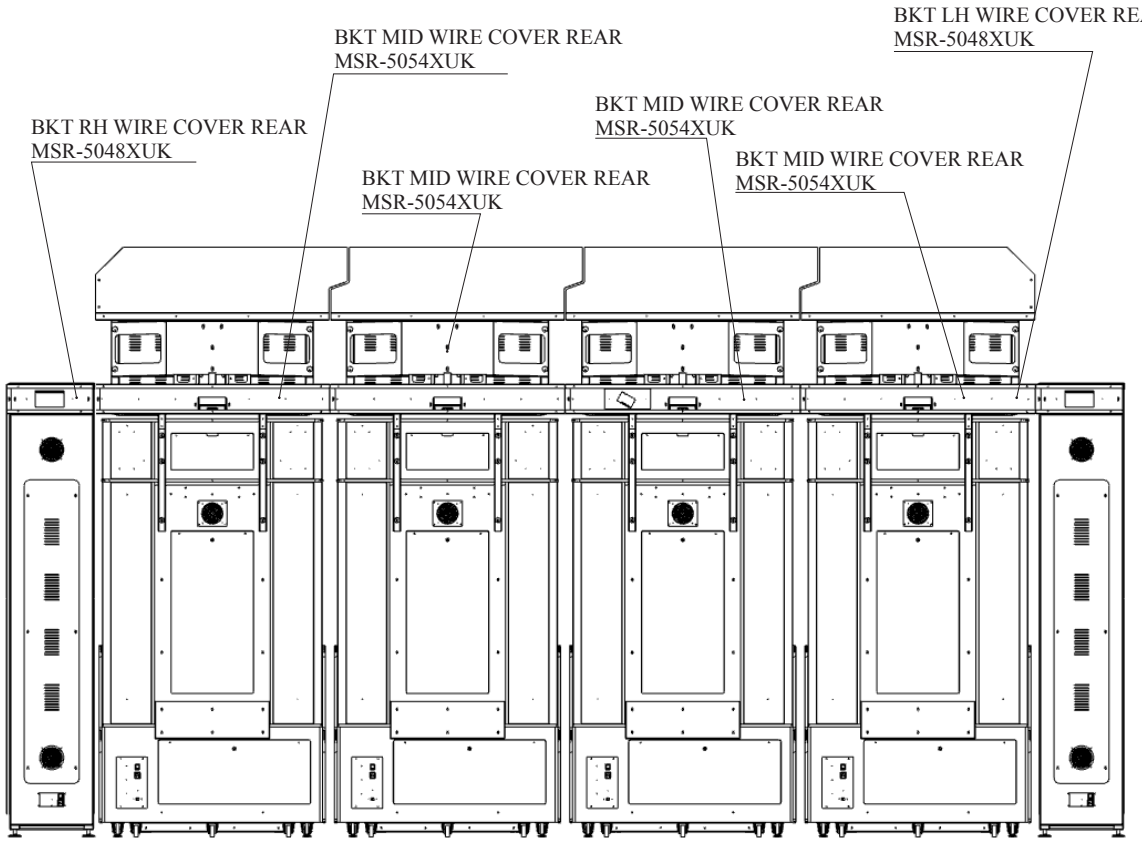

6-7 CONNECTING THE OVERHEAD DISPLAYS (HDMI)

Each OVERHEAD Display is connected to the VIDEO SPLITTER located in the LH TOWER.

1 Uncoil the (4) HDMI cables from the rear of the Cabinets and trace them through the BKT WIRE COVERS and down through the ASSY LH TOWER.

2 Using an M4 Socket Drive, remove the Cover panel from the ASSY LH TOWER.

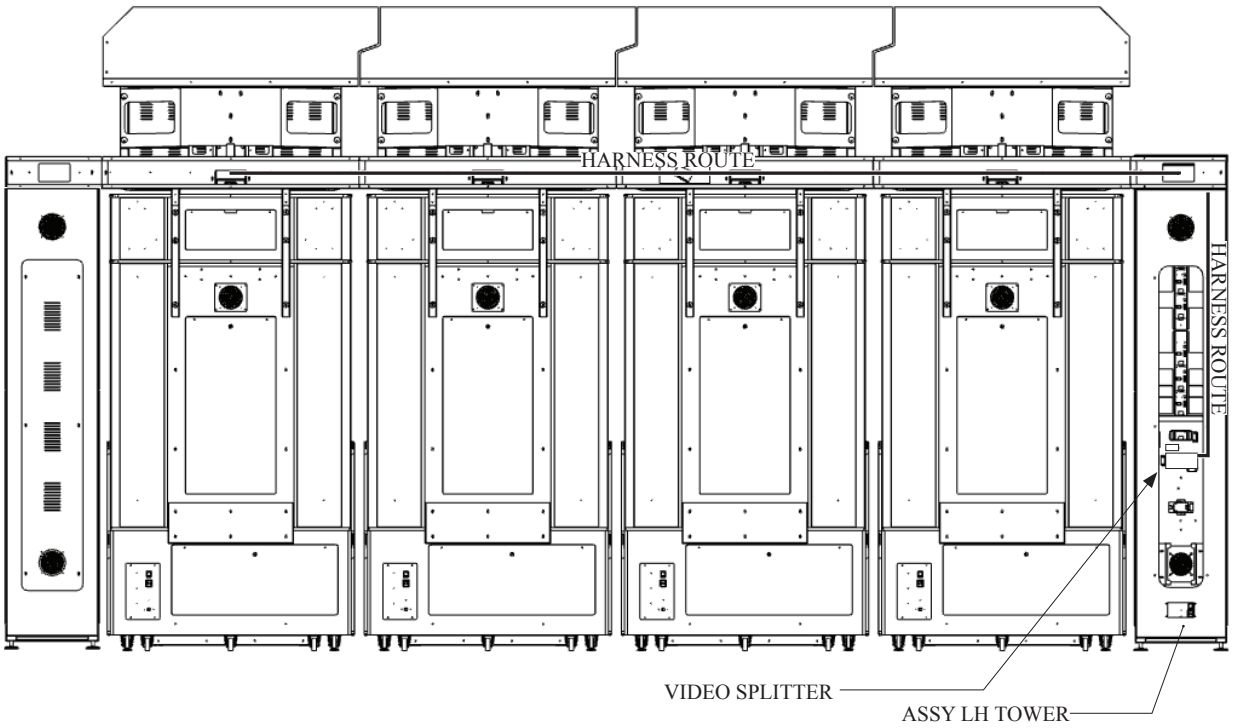

OVERHEAD DISPLAY CONNECTIONS

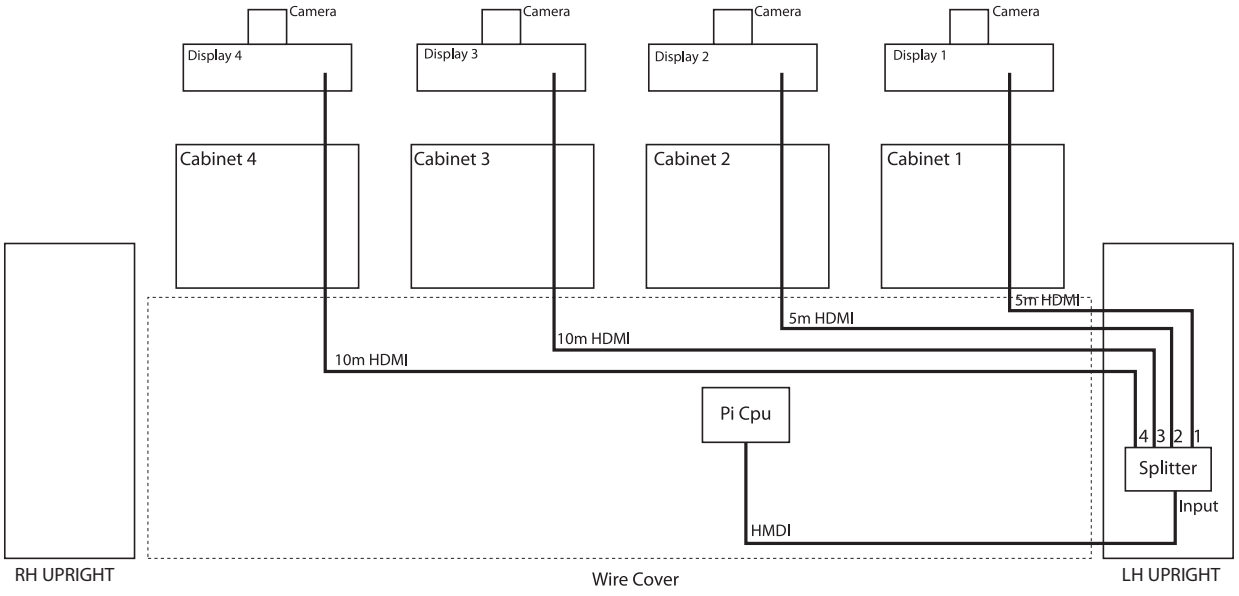

6-8 CONNECTING THE OVERHEAD CAMERAS

Each OVERHEAD CAMERA is connected to the PI CPU located in the BKT WIRE COVER (CABINET 2)

1 Uncoil the (4) USB CAMERA cables. The USB CAMERA cables from Cabinets 2 and 3 will connect directly to the PI CPU. The CAMERA cables from Cabinets 1 and 4 connect to the PI CPU via an EXTENSION CABLE.

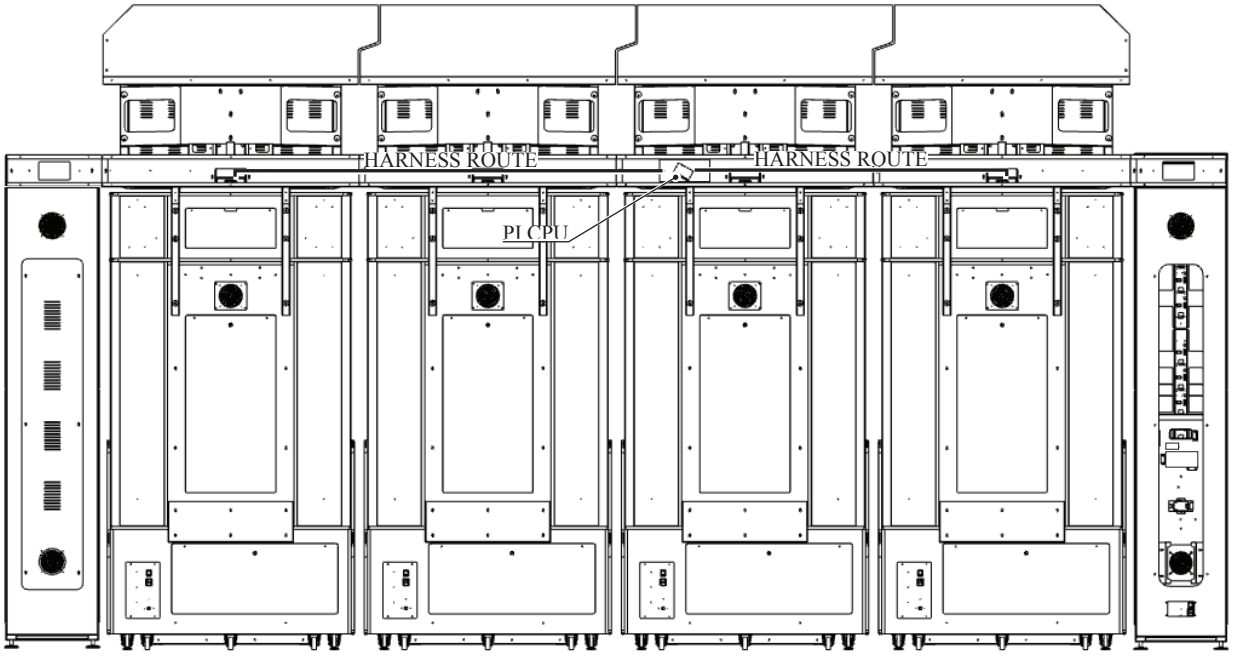

CAMERA CONNECTIONS

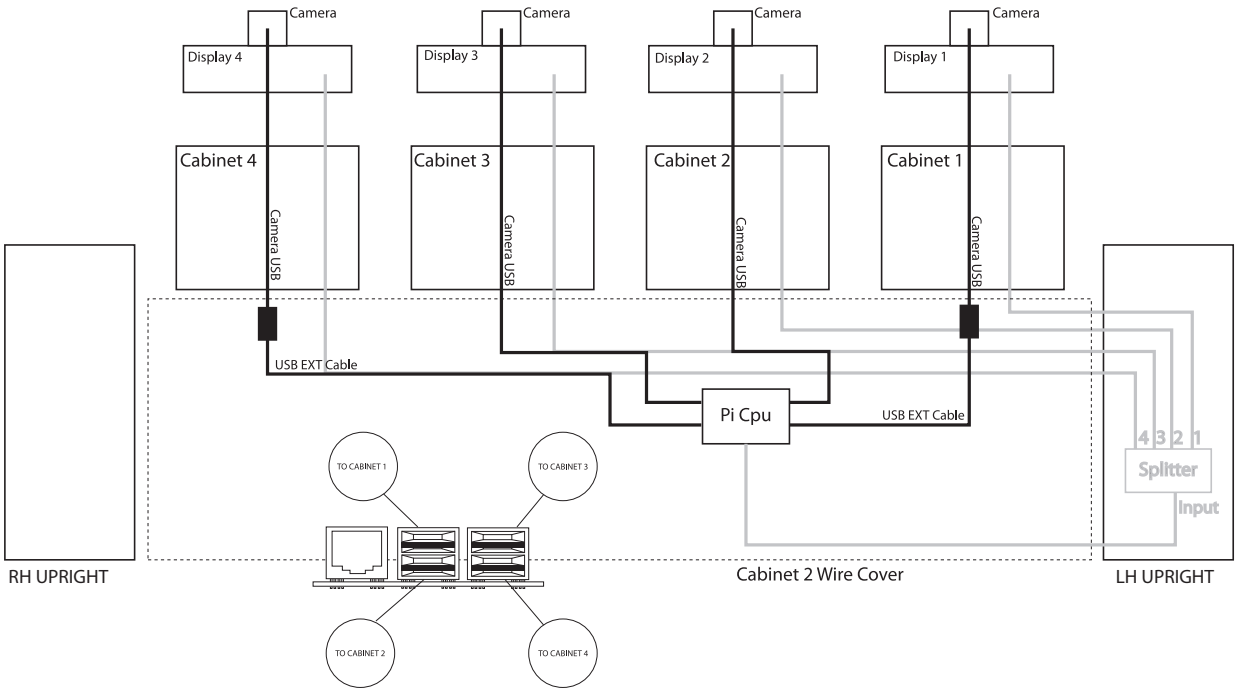

6-9 CONNECTING THE POWER CABLES

Connecting the POWER cables to the OVERHEAD DISPLAYS, PI CPU and ADJOINING TOWER.

1 Uncoil the (4) IEC POWER cables from the OVERHEAD DISPLAYS. Locate HARNESSES - MSR-60103UK, MRS-60109UK, MSR- 60111UK, MSR-60115UK, MST-60116UK, MSR-60117UK and MSR-60119UK

2 Apply harnesses as shown.

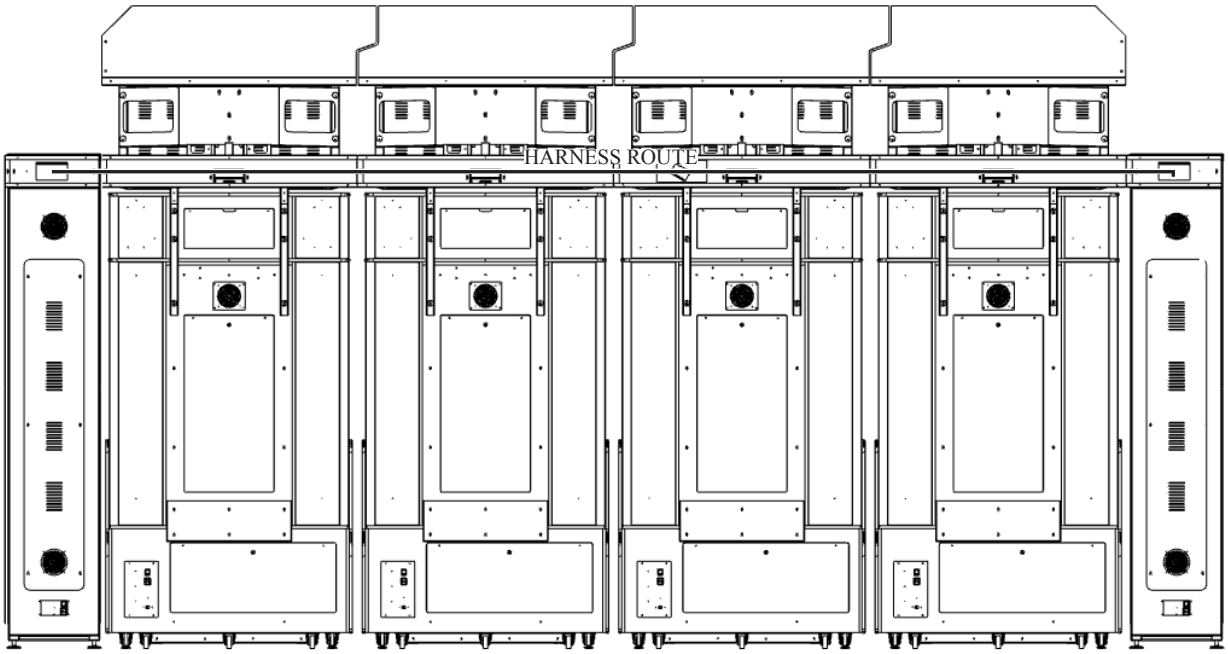

POWER CONNECTIONS

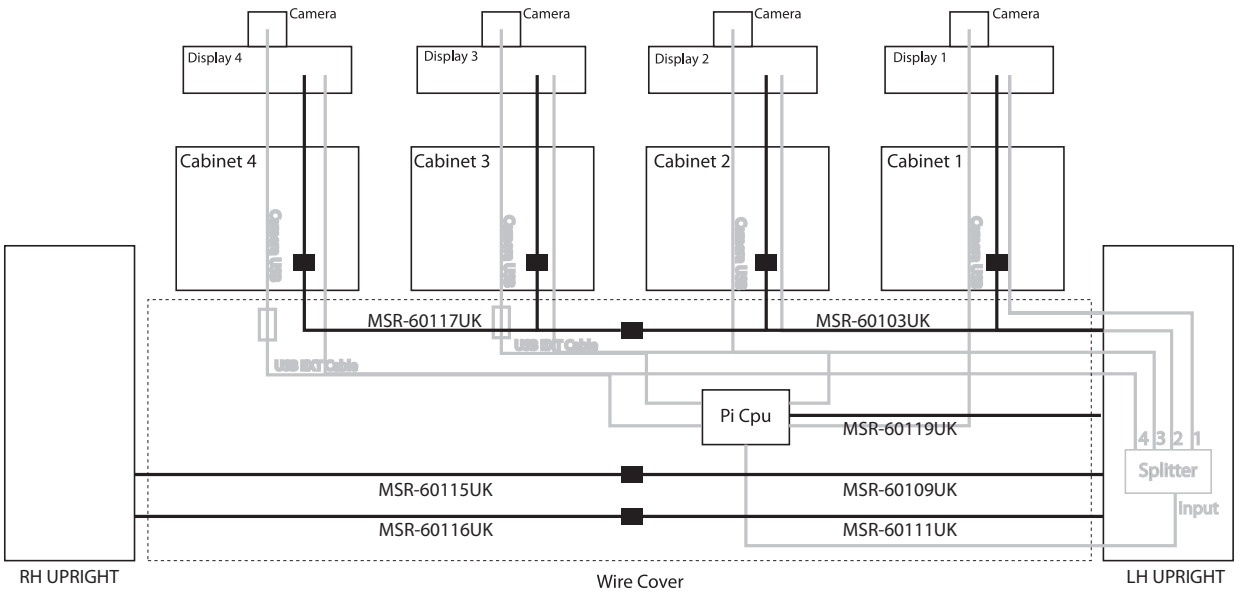

6-10 CONNECTING THE BILLBOARD LIGHTING CABLES

Each OVERHEAD DISPLAY is equipped with an LED strip which illuminates the artwork. Please follow the instructions below to apply these connections.

1 Uncoil the (4) remaining cables. Locate harnesses MSR-60110UK and MSR-60118UK.

2 Apply harnesses as shown.

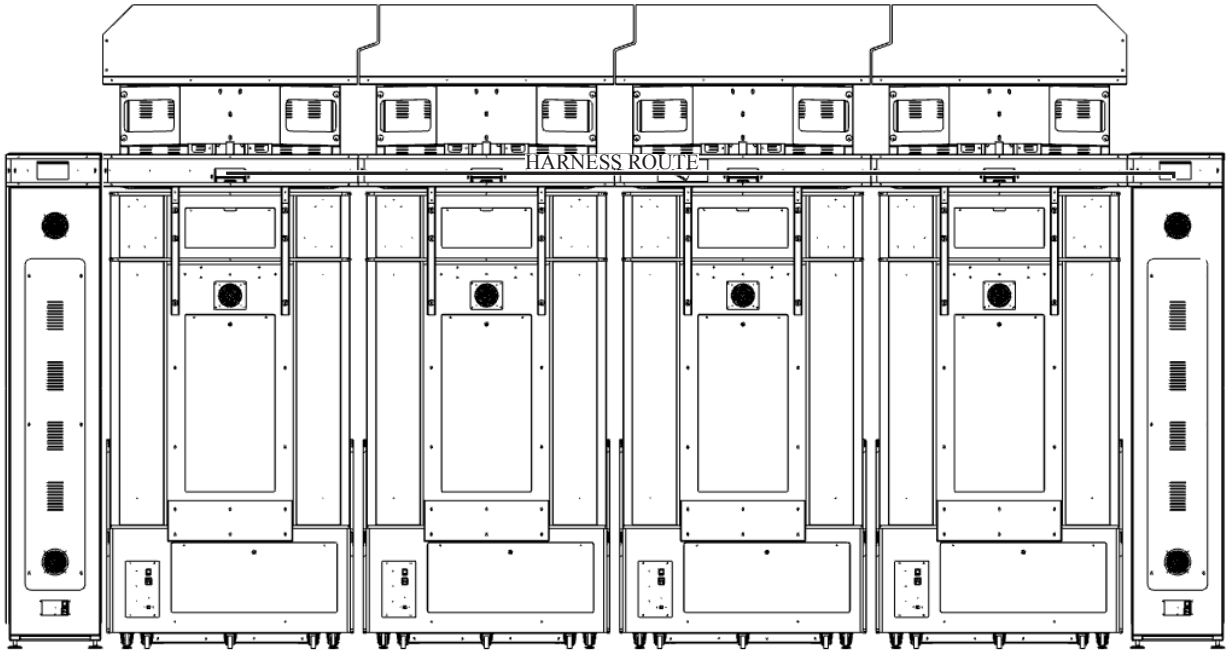

BILLBOARD LIGHTING

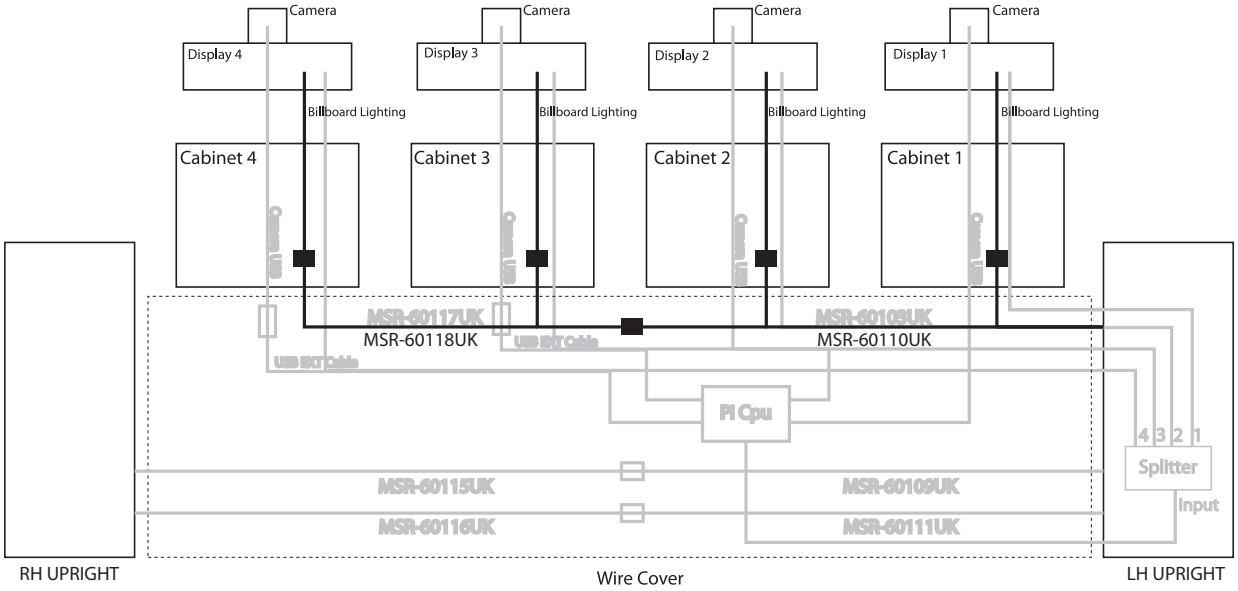

3 Once all the harness have been applied, secure them into the routers positioned within the BKT WIRE COVERS.

4 Refit the outer cover to the ASSY LH TOWER.

For a more detailed diagram of the wiring, please refer to the SCHEMATIC DIAGRAM pages found at the end of this manual.

6-11 APPLYING THE WIRE COVERS

Once all the connections have been made and the harnesses secured, attach the WIRE COVERS TO THE BKT WIRE COVERS.

1 Offer the (4) BKT MID WIRE COVER FRONT (MSR-5046UK) individually up to the BKT MID WIRE COVER REAR and secure each using (6) M4x16 SKT BH PAS and additional washers. where shown.

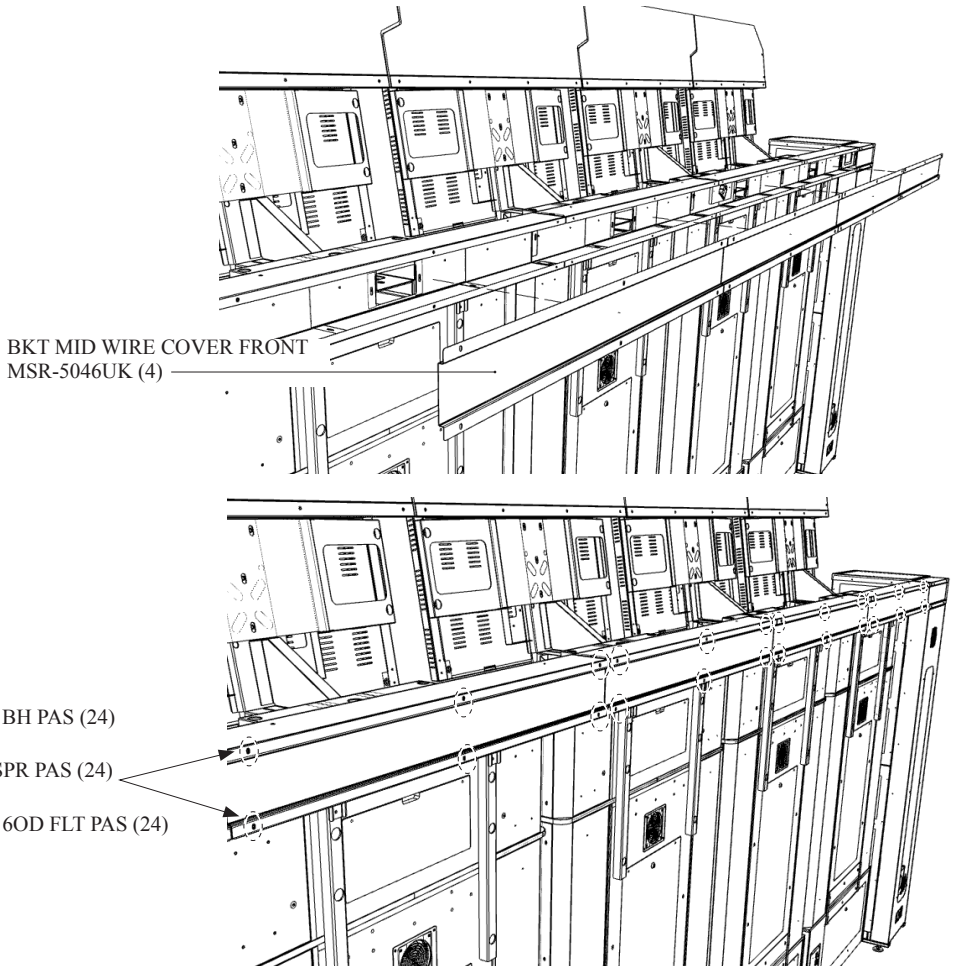

2 Offer the (2) BKT OUTER WIRE COVER FRONT (MSR-5049UK) individually up to the BKT WIRE COVER REAR on each of the TOWERS. Secure using (6) M4x16 SKT BH PAS and additional washers. where shown.

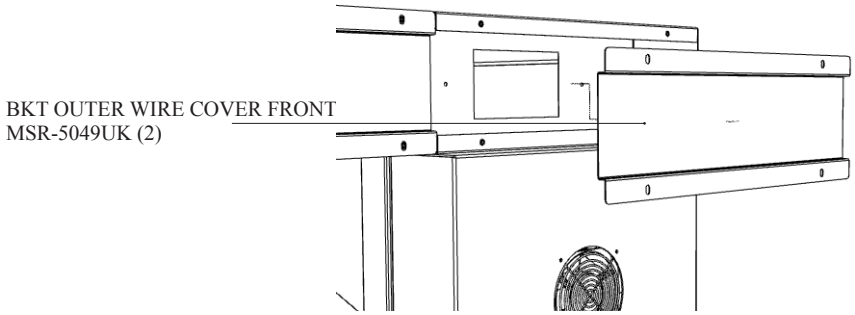

3 Repeat the above process when attaching the BKT OUTER WIRE COVER FRONT (MSR-5049UK) to the RH TOWER.

6-12 ATTACHING THE L&R TOWER ARTWORK

Each Tower has it's own Artwork which complete the scene running across the top of all 6 cabinets (inc Towers). Follow the instructions below on fitting the L&R TOWER Artwork.

For the purpose of these instructions we shall apply the Artwork to the LH TOWER. Parts and processes will remain the same for the opposing Tower.

1 *Locate the ASSY MARQUEE LEFT HAND PANEL.*

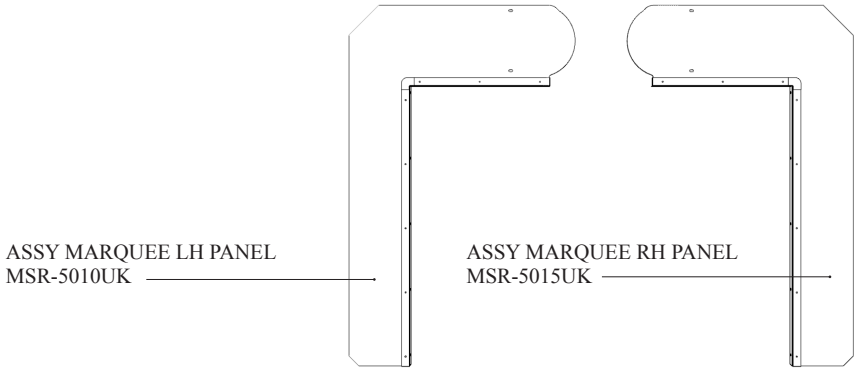

2 *Apply the ASSY MARQUEE LH PANEL to the LH Tower. Fix and secure using (8) M4x16 SKT BH PAS machine Screws in locations shown.*

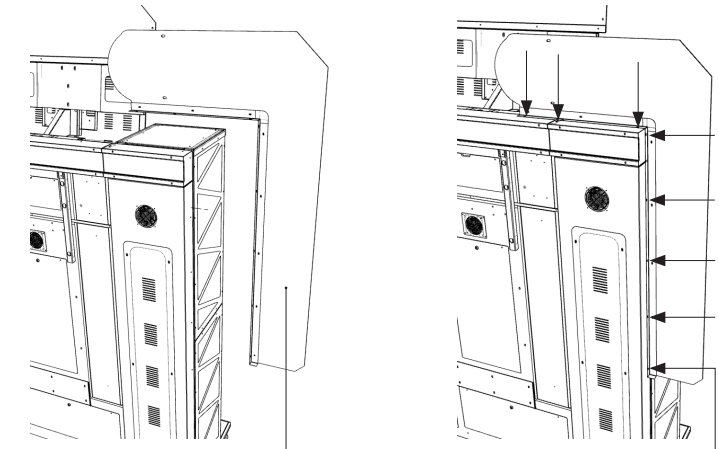

3 *Follow the same process as above to apply the ASSY MARQUEE RH PANEL to the RH TOWER.*

6-13 APPLYING POWER & OTHER CONNECTIONS

⚠ WARNING

- **Use the power supply equipped with an earth leakage breaker. Use of power supply without such a breaker could result in fire if there is a current leakage.**
- **Have available a securely grounded indoor ground terminal. Without proper grounding, customers could be electrocuted and product operations might not always be stable.**
- **Do not expose the power cord or ground wire. If these are exposed, customers could stumble over them, for instance, and easily damage them. Additionally, if these lines are damaged, there could be a risk of electrical shock or short circuit. Set these lines at locations where they will not interfere with customer traffic, or attach covers to them.**
- **After laying out the power cord on the floor, be sure to always protect it. If the power cord is left exposed, it can easily be damaged, resulting in electrical shock.**

1 Confirm that the MAINS SW is in the OFF position.

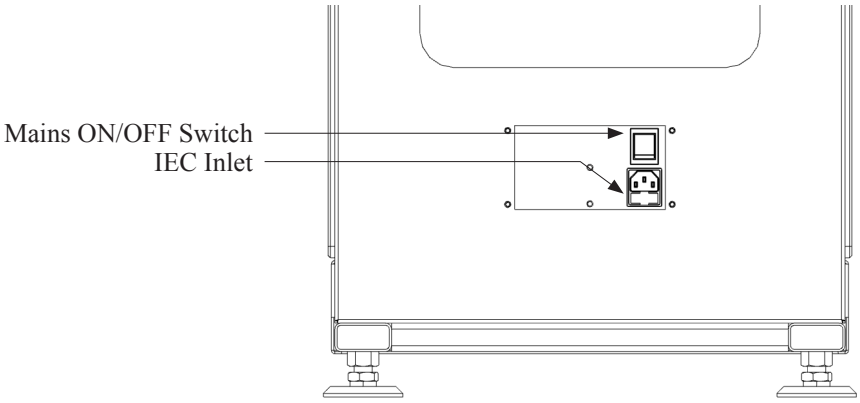

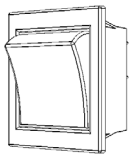

Mains Switch shown in OFF position

2 Fully insert the power cord connector on the side opposite the power plug into the AC unit IEC inlet. Insert the power cord plug into the outlet.

3 The power cord is laid out indoors. Protect the power cord by attaching a wire cover to it.

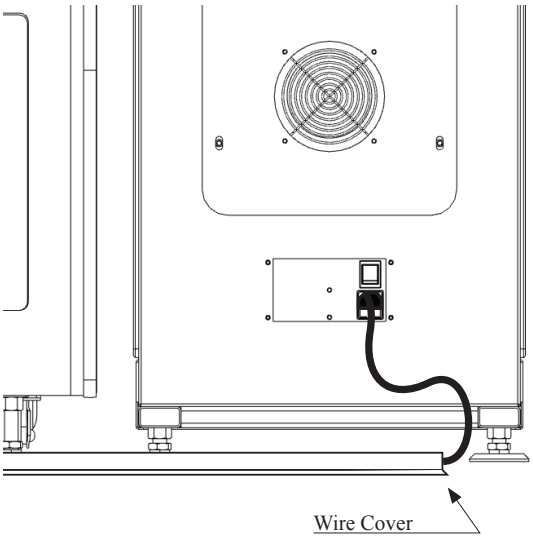

6-14 TURNING ON THE POWER

- Set the main switch of the AC unit to ON and engage the power.
- When you turn on the power, the TOWER LED's will illuminate and fade in and out of colours.
- The BILLBOARD lighting will illuminate.
- The OVERHEAD DISPLAYS will turn on and display a boot sequence.
- The OVERHEAD DISPLAYS will display a MARIO & SONIC advertisement screen.
- During the advertisement sequence of the OVERHEAD DISPLAY the CAMERA positions will be show.

COMPONENTS WHICH CHANGE STATE WHEN POWER IS APPLIED

Please refer to the MARIO & SONIC at the 2016 RIO OLYMPIC GAMES ARCADE EDITION Owners manual for changes to the Game cabinets when power is applied.

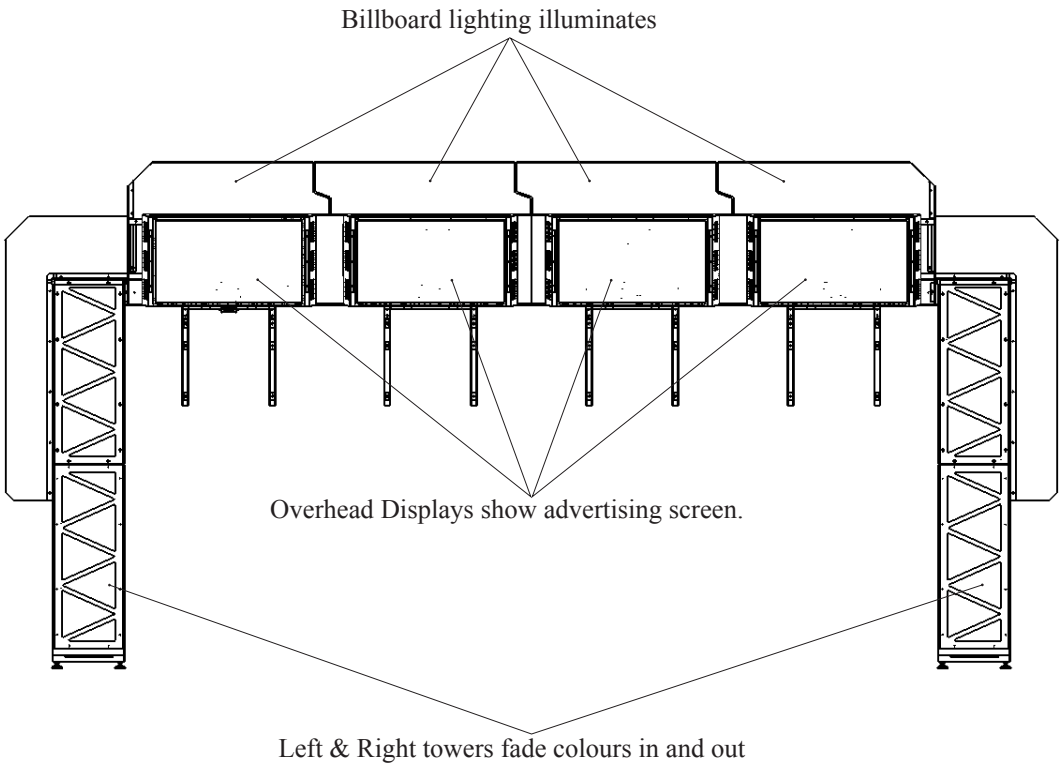

7 PRECAUTIONS WHEN MOVING THE MACHINE

⚠ WARNING

- As used in these instructions, the term “moving” refers to moving of the product within the same building, store or facility. These instructions do not cover moving between different buildings, areas, stores or facilities, since diverse factors are involved, not only packaging but also loading onto transport vehicles, and securing the product in place during transport. To transport the product to a different building or store, contact the vendor where the product was purchased or the office indicated in these instructions. Or request that moving be done for you. This product is made up of parts that are of large size and heavy weight. Unless work is entrusted to someone with expertise in packaging and transport of such parts, a serious accident might occur.
- Even when the product is to be moved within the same building, store or facility, contact the point of purchase or the office indicated in these instructions if there will be level differences or narrow or low level entrances while moving. Or request that moving be done for you. Never disassemble the product in any way not covered in these instructions. Otherwise there could be a fire, electric shock and/or short circuit.
- Always disconnect the power cable before moving the product. If it is moved with the power cable connected, the cable could be damaged, causing fire or electric shock.
- A qualified electrician is required for moving product parts within a store and for changing indoor wiring. Do not have work performed by anyone who is not qualified. Otherwise there could be electric shock.
- Have work performed by site maintenance personnel or other qualified individuals. Do not allow people without proper knowledge and technical expertise to work on the product. Otherwise there could be an electric shock or other serious accident. Also, customers could be injured while operating the product.
- Do not try to move this product while it is still assembled. Always remove the Billboard and split the cabinets before moving.
- Because it is structurally difficult for exterior lighting to enter the cabinet, have auxiliary lighting available. Working within a dark environment can lead to accidents.
- For instructions on separation and disassembly of the cabinet, refer to Chapter 6 of this manual. Failure to follow the instructions given by this manual leaves a high risk of accidents such as electric shock occurring.
- Proceed with checks and tasks as indicated in these instructions. If instructions are not followed, or if tasks and/or checks are neglected, an electric shock or other very serious accident, even fatal accident, can occur. Also, customers could be injured while operating the product.
- Be careful not to damage wiring. Before separating parts that have wiring connections, disconnect the wiring connections, unravel wire bundles and undo fastenings. Only after that, remove fasteners (screws, nuts, etc.). If wiring becomes damaged, there could be an electric shock, short circuit or fire.

⚠ WARNING

- When inserting or removing a connector, always hold it by its main part. If you hold it by anything else while doing so, the connections between wire and connector terminal fixtures could be damaged; and there could be a short circuit or fire. There could also be poor connectivity.
- Do not move unit with the adjusters in contact with the floor. Otherwise parts might be damaged or deformed and there might be accidents.
- Whenever any fasteners (e.g. screws, nuts) have been lost, always use replacement fasteners with proper dimensions as specified in this manual. If fasteners of any other dimensions are used, it could cause damage and/or separation of parts that result in secondary accidents.
- Do not place the cabinet on inclines or uneven surfaces. This could result in the unit falling over.
- Check surroundings carefully while moving the unit. If you should get caught between the unit and a wall, for instance, there could be a serious accident.
- Have on hand a number of workers appropriate for each task that needs to be done. Make calculations by approximating that one worker can lift roughly 15 kg of weight. If an insufficient number of workers try to lift a heavy object, it could result in a worker stumbling and the object being dropped, crushing someone or something underneath. Workers could also injure their backs, etc.
- When lifting a heavy object, be sure to carefully consider the area where it will be lifted. If possible, lift the object by its handles or base. If weak fasteners or fragile parts are gripped, they could be damaged under the weight of the object, and this could result in a worker stumbling and the object being dropped, causing personal injury.
- Never disassemble the unit in ways other than those described in this manual. Doing so can cause accidents such as electric shocks, short circuits, and fires.
- Do not attempt to tilt the unit to fit it through narrow doorways. Moving the unit while it is tilted can result in an accident. It can also cause deformations and damage to parts, as well as deviations of fastening positions, which could result in accidents during operation.

STOP IMPORTANT

- If moving through a door or places that may become narrow, i.e corridors or places which have low ceilings such as an elevator, you should remove the billboard.

⚠ CAUTION

- Do not push plastic parts or any part associated with the moving mechanism. Do not lift or support the product by any plastic part. Parts can be damaged, and fragments can cause injury.
- Do not push on or hold onto the LCD or controllers to move the unit. Doing so could break the parts and lead to people getting injured..
- Do not stack parts that have been separated or disassembled indiscriminately. The surface of the parts could be damaged or deformed. Significant deformations can result in improper operation and breakdowns.
- Do not lean separated or disassembled parts against a wall or other surface indiscriminately. The parts could be deformed. Accidents could also occur should the parts fall over.
- Do not hold onto the controllers to use as a lever or leverage. Doing so may cause damage resulting in injury to the player or impaired game play.

STOP IMPORTANT

- If the unit is moved over floor surfaces where there is carpet, decorative panel, etc., there might be friction or soiling.
- Movement by casters can damage the floor, depending on the floor material. Have a mat or thin plate available for moving casters. If rugs, for instance, have been laid out, remove them before moving.
- Be careful not to damage delicate parts as the rear seat moulding/ billboard end caps etc whilst moving the product. Always push/pull the product levering from the bolted on metal parts or by the lower sections such as the base.
- Do not apply rope directly to the product's surface. Use protective material at locations where rope is applied taking care not to damage components attached to the machine.

STOP IMPORTANT

- The strength of this product's joints were not designed such that the product can be moved while assembled. Attempting to push on the cockpit, etc. to move the unit while assembled can result in damage, deformation, and misalignment of the joints. Abnormalities in the joints can result in improper operation or breakdown in internal mechanisms.

It is not recommended to move or try to move this machine once assembled. If there is no other alternative but to move the machine, then a complete disassemble will be required. Follow the instructions in section 6 of this manual and in the MARIO & SONIC at the RIO 2016 OLYMPIC GAMES ARCADE EDITION Owners manual in reverse order in order to dismantle this machine safely.

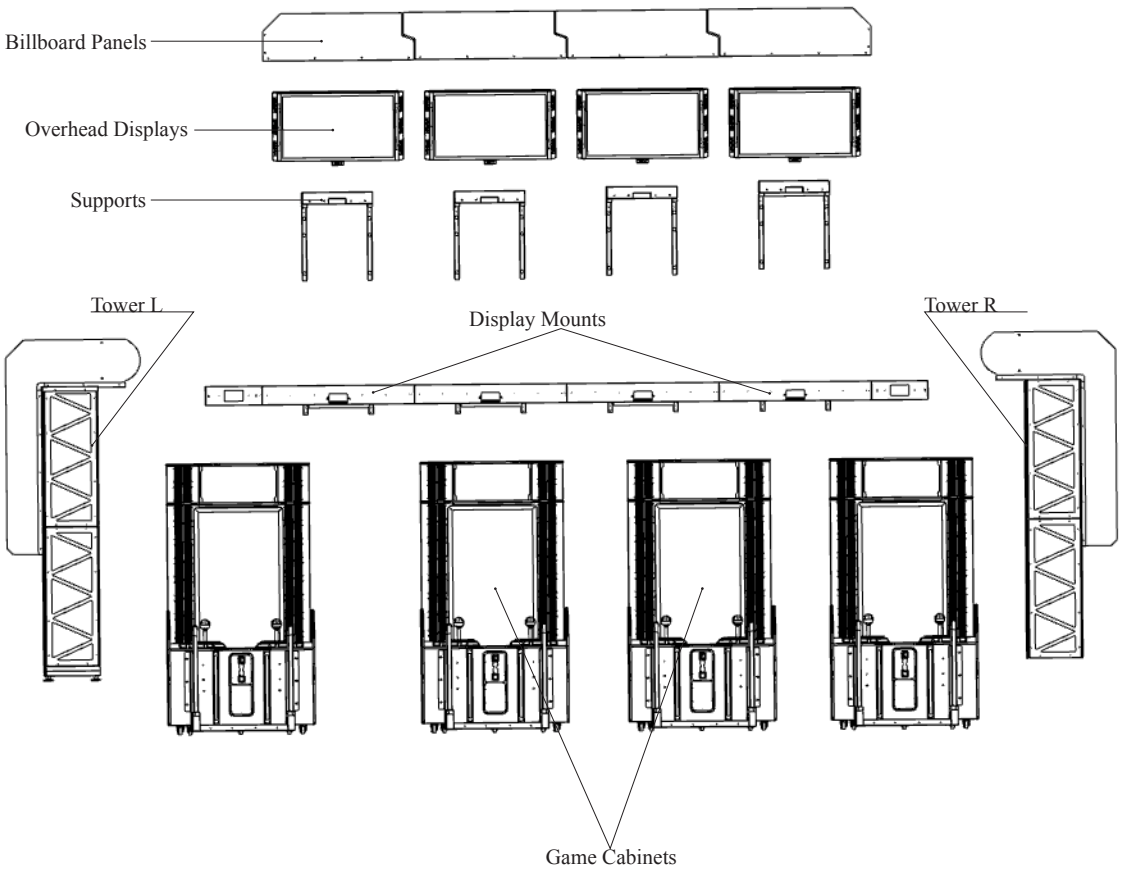

8 GRAPHICS DISPLAY

8-1 SAFETY PRECAUTIONS WHEN HANDLING THE MONITOR

⚠ WARNING

Responding to breakdown or abnormality

- **If smoke or a strange odor appears, immediately unplug the power cable from the power source.**

  Continuing to use the product may cause a fire or an electric shock. Ensure that smoke is no longer emitted, and contact the point of purchase.

- **If nothing displays on the screen, immediately unplug the power cable from the power source.**

  Continuing to use the product may cause a fire or an electric shock. Contact the point of purchase and request an inspection.

- **If water or a foreign object enters the monitor's interior, immediately unplug the power cable from the power source.**

  Continuing to use the product may cause a fire or an electric shock. Contact the point of purchase and request an inspection.

- **If the monitor is dropped or the cabinet is damaged, immediately unplug the power cable from the power source.**

  Continuing to use the product may cause a fire or an electric shock. Contact the point of purchase and request an inspection.

During operation

- **Do not repair, reconstruct, or disassemble the monitor.**

  The monitors interior contains high voltage parts. A fire or an electric shock could result.

  For inspections, adjustments, and repair of the monitors interior, request work from the point of purchase.

- **Do not insert foreign objects.**

  If metal objects or flammable materials such as paper are inserted into the interior through ventilation openings or other apertures, an electric shock could result.

- **In the event of a thunder storm, do not touch the product or the power cable. An electric shock could result.**

- **Make sure to perform appropriate adjustments. Do not operate the product when the screen is flickering, distorted, or experiencing other abnormalities. Images from an improperly adjusted screen could cause players and other customers to experience dizziness, headaches, and other ailments.**

8-2 CLEANING THE SCREEN SURFACE

⚠CAUTION

- **Use a soft, dry cloth (flannel-type) to wipe away dirt. Do not use materials such as coarse mesh gauze.**
- **Alcohol (ethanol) is the recommended solvent for removing dirt. When using a cleaning agent, follow the precautions below.**

- Dilute neutral cleaning agents for home use with water. Soak a soft cloth in the solution, and wring it thoroughly before wiping the screen.

- Do not use abrasive cleaning agents or powders, or cleaning agents containing bleach.

- Do not use alkaline cleaning agents such as glass cleaners, or solvents such as thinners.

- **Do not scrub or scratch the screen surface with abrasive materials such as brushes or scrub brushes.**

CLEAN THE SCREEN DAILY.

8-3 ADJUSTMENT METHOD

IMPORTANT

All adjustment values are set accurately at the time of shipping from the factory. Do not readjust these values needlessly or apply adjustments not specified in this manual. The display may not appear properly if the values are incorrect.

CONTROL - ADJUSTMENT PROCEDURE

This sections explains basic control procedures for making adjustments using the buttons on the 'Monitor Adjustment Board'

This Adjustment Board is located on the underside of each OVERHEAD DISPLAY. Using an Allen Key Wrench. undo the (2) M4x12 SKT BH Machine Screws and remove the OSD Controller BKT.

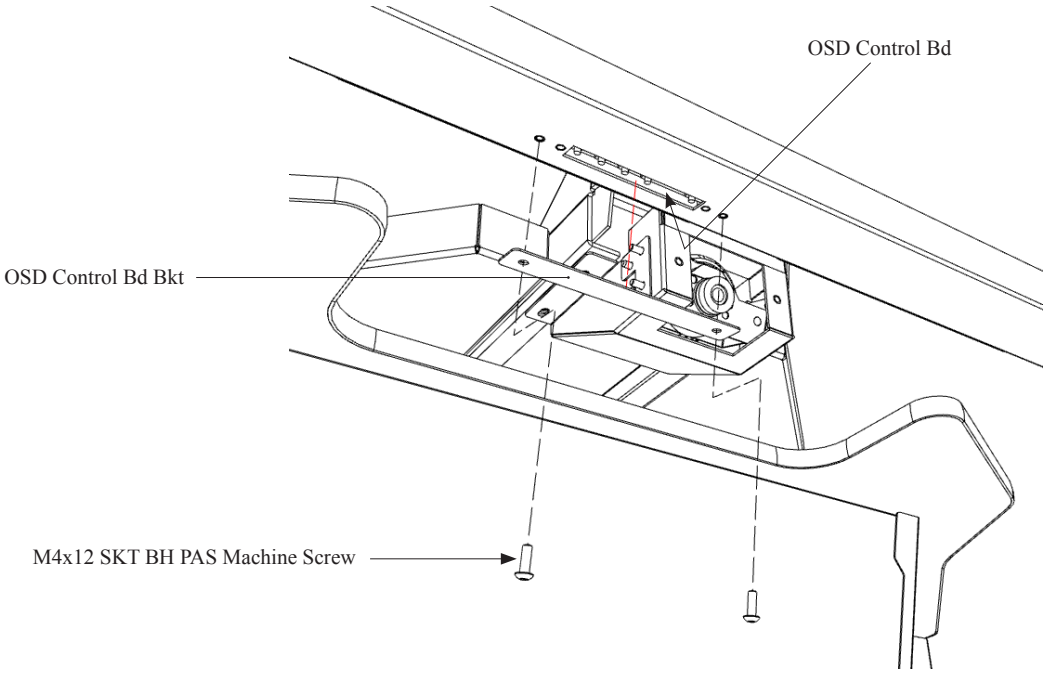

IMPORTANT

Although each display is configured prior despatch it may be possible that the settings may be lost for one reason or another.

If this is the case then please ensure that the SOURCE is set to DVI and the AUTO SCAN feature is turned off.

Once the image is displayed the AUTO SET UP button may be pressed. This only is required to be carried out just the once if all settings are lost.

Button Names and Functions

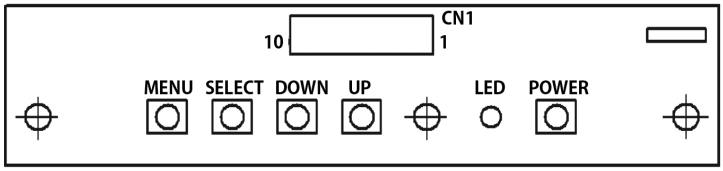

MENU: Turn the Picture Menu display ON and OFF.

SELECT: Gains entry to the Item selected in the menu. (Highlights in Yellow when selected) Exits the Item adustment. Any changes made during this operation are actioned.

DOWN: Moves the cursor (Black Bar) down to select a menu item.
Decrease the value of, or change, a selected menu item.

UP: Move the cursor (Black Bar) up to select a menu item.
Increase the value of, or change, a selected menu item.

LED: LED illuminates green: Monitor is operating.
LED flashes red: Power is off.

POWER: Turns the LCD Display ON and OFF. (Usually, it's not necessary to operate.)

On-Screen Display (OSD)

Press the MENU Button while the OSD is not displayed to bring up the Picture Menu.
On the Picture Menu, it is possible to perform various screen adjustments.

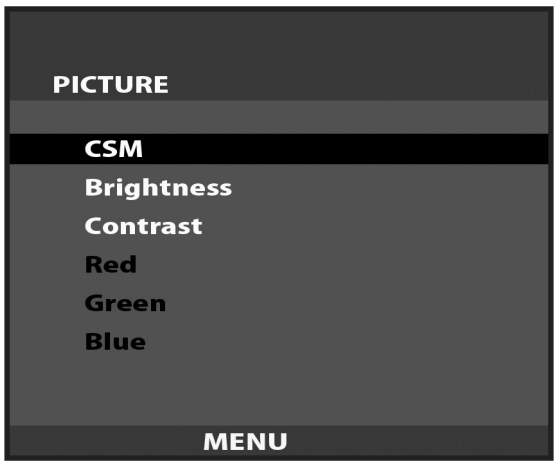

Use the UP and DOWN Buttons to move the 'Black Bar'to the item you want to adjust.
After selecting the desired item, pressing the SELECT Button will extend the MENU Screen and allow adjustments to be changed.

Within each item, press the SELECT Button to exit the adjustment screen. The adjustment values at this time will be saved simultaneously.

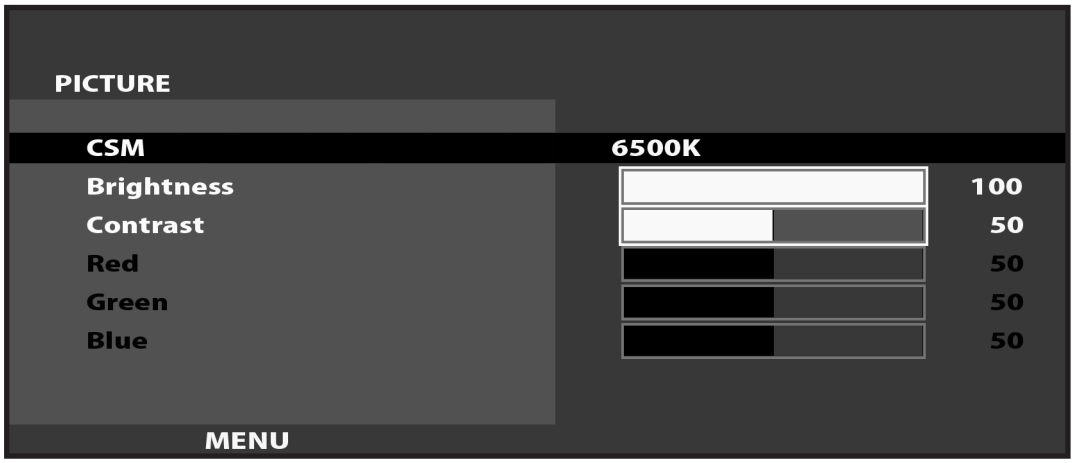

The current options are set at :

CSM	-	6500K
Brightness	-	100
Contrast	-	50

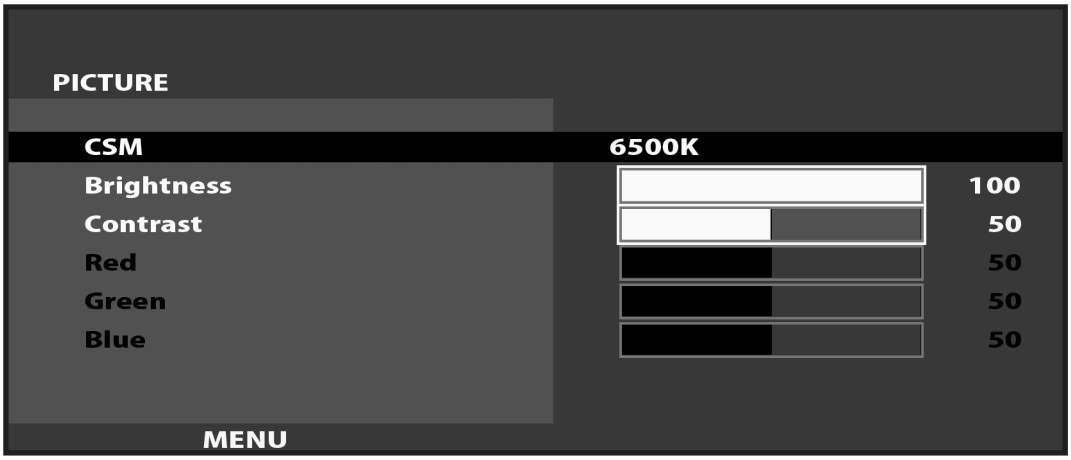

Available Settings

CSM (Selects Operation Mode))
Selection availble - 6500K - 9300K - USER

BRIGHTNESS (Adjust Brightness)
Adjust screen Brightness. - Values: 0 - 100
(0" being the darkest setting, and "100" being the brightest)

CONTRAST (Adjust Contrast)
Adjust Contrast level. - Values: 0 - 100
(0" having the least amount of difference between light and dark, and "100" having the most)

NOTE : The Red, Green, and Blue adjustments are unavailable in the Mode of Operation selected on the Screen shown in 11-3 Fig. 06. These adjustments can only be made is the CSM option is set to 'User'.

9 PERIODIC INSPECTION

The items listed below require periodic check and maintenance to retain the performance of this machine and to ensure safe business operation.
When handling the controller, the player will be in direct contact with it. In order to always allow the player to enjoy the game, be sure to clean it regularly. Also, it is advisable to provide wet tissue, etc. available for player use.

⚠ WARNING

- **Every 6 months check to see if power cords are damaged, the plug is securely inserted, dust is accumulated between the socket outlet and the power plug, etc. Dust will accumulated if using the product regularly. Continued use with the presence of accumulated dust may result in a fire and or electric shock.**
- **There is the danger of accidents involving electrical shorts circuits or fire caused by factors such as the deterioration of insulation in electrical and electronic equipment over time. Check that there are no abnormalities such as odors from burning.**
- **For all normal maintenance procedures, always turn off the power before beginning. Starting the procedures with the power still on can result in electric shocks or short circuits.**
- **When restoring power after maintenance is completed or going into or coming out of the Test Mode, be sure to verify that there are no people near the product. When the power is restored or when coming out of Test Mode, the product will automatically undergo initialization operation. If people are near the product, it could result in an accident involving the moving mechanism.**
- **In the event that parts related to the ride mechanisms (motors or reducers, etc.) are damaged or break down, or when parts replacement or repairs are needed, request work be done by the point of purchase or the office listed in this manual. Such procedures require specialized knowledge, techniques, and tools. Improperly performed procedures can result in accidents.**
- **Do not use a water jet (high pressure washing device) or hose to clean this product. It was not designed to be cleaned by a water jet. Water could get inside and cause electrocution or short circuits. The product could also be damaged in such a way that it is difficult to repair.**

⚠ CAUTION

- **Be careful not to get your fingers caught when opening/closing or attaching/removing doors, lids and other such parts.**
- **When working inside the cabinet, you could get caught on parts or scratch yourself on them. Check the inside of the cabinet and be aware of where the parts are before performing the work.**

Cleaning the Cabinet Surfaces

When the cabinet surfaces are badly soiled, remove stains with a soft cloth dipped in water or diluted with a chemical detergent and squeezed dry. To avoid damaging surface finish, do not use such solvents as thinner, benzine, etc. other than ethyl alcohol, or abrasives, bleaching agent and chemical dustcloth.
Some general-purpose household, kitchen and furniture cleaning products may contain strong solvents that degrade plastic components, coatings, and print. Before using any cleaning product, read the product's cautionary notes carefully and test the product first on a small area that is not highly visible.

DISPLAY (LCD SCREEN Cleaning)

When the Display LCD Screen surfaces are dirty, smudges or greasey, gently wipe the display with a dry, lint-free, soft cloth. If you see a scratch-like mark on your display, it might be a stain which has been transfered from food like matter when the screen was depressed from the outside To avoid damaging surface finish, do not use such solvents as thinner, benzine, etc. the same applies to ethyl alcohol, or abrasives, bleaching agent and chemical dustcloths.

Wipe or dust the stain gently with a dry, soft cloth. If the stain remains, moisten a lint-free, soft cloth with water or a 50-50 mixture of isopropyl alcohol and water that does not contain impurities. Wring out as much of the liquid as possible and wipe the display again; do not let any liquid drip from the cloth.

Antistatic and purpose made LCD cleaning wipes are also acceptable alternatives.

STOP IMPORTANT

Isopropyl Alcohol is a flammable liquid.

Do not use this cleaner near an exposed flame or clean the screen when it is powered on..

PERIODIC INSPECTION TABLE

PERIOD	ITEMS	DESCRIPTION
As appropriate	CABINET SURFACE	Cleaning
	LAMPS	Inspection
Daily	TOWER L&R	Confirm adjusters contact floor
Weekly	LCD	Screen Cleaning
		Check monitor adjustment
Monthly	TOWER L&R	Check LED operation
	BILLBOARD	Check LED operation
	CAMERA	Check alignment and focus
Every 3 Months	TOWER	Inspect outer fixings
		Inspect acrylics.
	OVERHEAD DISPLAYS	Inspect fixings
		Inspect stability
1 year	INSIDE TOWER L&R	Cleaning
	POWER PLUG	Inspection, Cleaning
	OUTER TOWER L&R	Cleaning

10 TROUBLESHOOTING

10-1 TROUBLESHOOTING (WHEN NO ERROR MESSAGE IS SHOWN)

⚠WARNING

- **In order to prevent electric shock and short circuit, be sure to turn power off before performing work.**
- **Be careful so as not to damage wirings. Damaged wiring can cause electric shock or short circuit.**
- **After removing the cause of the functioning of the Circuit Protector, reinstate the Circuit Protector. Depending on the cause of the functioning, using the Circuit Protector as is without removing the cause can cause generation of heat and fire hazard.**
- **In the event that a problem cannot be resolved by employing the procedures listed in this Manual, be sure to request service from the office shown on this Manual or the dealer from whom the product was originally purchased. Attempts to employ procedures other than those specified in this Manual can cause electrical shock, shorting, or fire.**
- **In the event of a problem that is not described here, be sure to contact the office shown on this Manual or the dealer from whom the product was originally purchased. Careless attempts at repair can result in electrical shock, shorting, or fire.**

Replacing Fuses

⚠WARNING

- **In case fuse replacements other than those stated in this manual are necessary, contact where you purchased the product from for inquiries regarding this matter.**
- **In order to prevent an electric shock, be sure to turn power off and unplug from the socket outlet before performing work by touching the internal parts of the product.**
- **Be careful so as not to damage wirings. Damaged wiring can cause electric shock and short circuit accidents.**
- **Be sure to use fuses meeting specified rating. Using fuses exceeding the specified rating can cause fire and electric shock accidents.**
- **After eliminating the cause of the blowing of fuse, replace the fuse. Depending on the cause of fuse blowing, continued use with the fuse as is blown can cause generation of heat and fire hazard.**

⚠ WARNING

- This work should be performed by site maintenance personnel or other skilled professionals. Work performed by non-technical personnel can cause a severe accident such as an electric shock. If there are no site maintenance personnel or other skilled professionals available, turn the power off immediately and contact the office given in this manual or from the point of purchase.
- When working with the product, be sure to turn the power off. Working with the power on may cause an electric shock or short circuit. When working with the product, be sure to turn the power off. Working with the power on may cause an electric shock or short circuit.
- Be careful not to damage the wires. Damaged wires may cause electric shock or short circuit or present a fire risk.
- After the cause of circuit protector activation has been removed, have the circuit protector re-engaged. If the unit is used continuously as is, there could be heat generation or fire, depending on the cause of the activation.
- When the power has been engaged or the TEST MODE has been terminated, initialization takes place automatically. If anyone is near the product, they could come in contact or collide with it. Check carefully to be sure that no one is near the product and that no tools or items have been left on the product, then engage the power or terminate TEST MODE.
- If problems other than those covered in this manual arise, or if no improvements can be noted after measures given in this manual have been taken, do not take measures indiscriminately. Cut off the power immediately and contact the office shown in this manual or the dealer from whom the product was originally purchased. Indiscriminate countermeasures could lead to unforeseeable accidents. They could also result in permanent damages. Also, if the power is left on while there is an abnormality, a fire, electric shock or other serious accident can occur.

STOP IMPORTANT

- If an error message is displayed, identify the cause right away and take the appropriate countermeasures. Leaving the error unaddressed could result in a breakdown.
- If a problem occurs, first inspect the connection of any wiring connectors.
- Static electricity from your body may damage some electronics devices on the IC board. Before handling the IC board, touch a grounded metallic surface so that the static electricity can be discharged.

PROBLEM	CAUSE	COUNTERMEASURE
With main switch ON there is no activation	Power is not supplied	Insert power lead all the way into outlet
	Supply voltage is not correct	Make sure that supply voltage is correct
	Circuit protector activated	Reset circuit protector/replace fuse
There is lighting but no video signal	Video signal connector or monitor power connector is not properly connected	Check connections of the monitor and at the PI and Video Splitter
Incorrect colour on monitor	Poor connection of video cable	Confirm connection of video/VGA cable.
	Monitor fault	Contact point of purchase
Screen saturation and brightness not correct	Screen not properly adjusted	Adjust screen settings
Video displays are lit but no graphic are displayed on screen..	Poor connection of connectors	Check connection at Splitter
	No Video software on PI cpu	Check the Micro SD Card in PI
LEDs in the Towers not operating	LED Controller is not switched on.	Press the power bottom on the LED controller
	Connections at the LED Controller are bad	Check and re-sit the connections at the LED controller.
Billboard displays not illuminating.	Bad connection between Billboard LED and PSU	Check connections between Billboard and PSU.
		Disconnect and reconnect connections where possible.
Overhead displays do not show attraction video footage.	Overhead display configured incorrectly.	Check the source for the overhead displays is set to DVI
		Disable the autoscan feature on the overhead displays.
The Cameras do not show in the correct sequence	The connection to the PI controller are incorrect.	Disconnect the Camera USB cables to the PI Controller and reposition them in the correct sequence.
The Cameras are not operational.	The connections to the PI controller is bad.	Check connections to and from the Camera to the PI controller.
The Camera shows an out of focus image.	The focus adjustment on the Camera is incorrect.	Adjust the Camera focus.
	The is dirt or an obstruction in front of the camera lens	Clean the camera lens

Any problems found outside the description of this troubleshooter, please contact your local service department

11 RASBERRY PI CONTROLLER

⚠ WARNING

- When working with the product, be sure to turn the power off. Working with the power on may cause an electric shock or short circuit.
- Be careful not to damage the wires. Damaged wires may cause an electric shock, short circuit or present a risk of fire.
- Do not use this product with connectors other than those that were connected and used with the CPU at the time of shipping. Do not carelessly connect wires to connectors that were not used at the time of shipping, as this may cause overheating, smoke or fire damage.

16-1 HANDLING PRECAUTIONS

⚠ WARNING

- To prevent electric shock or IC Board malfunctioning, be sure to turn off the power for the cabinet when installing or removing the IC Board.
- Extraneous matter such as dust on the IC Board can cause the IC Board to generate heat and result in a fire due to short circuit, etc. Ensure the IC Board surfaces are always kept clean.

STOP IMPORTANT

- Be sure to connect the IC Board and connectors completely. Insufficient insertion can damage IC Board, etc.
- For the IC Board circuit inspection, only the use of Logic Tester is permitted. The use of ordinary testers is not permitted as these can damage the IC Board.
- Do not subject the IC Board to static electricity when installing the IC Board in the cabinet or when connecting wire harness connectors to the IC Board.
- When soldering buttons, etc. to the wire harnesses, be sure to remove the wire harnesses from the IC Board so as not to subject the IC Board to heat.
- Some parts are the ones designed and manufactured not specifically for this product. The manufacturers may discontinue, or change the specifications of, such general-purpose parts. If this is the case, SEGA cannot repair or replace a failed product whether or not a warranty period has expired.

Static electricity from your body may damage some electronics devices on the IC board. Before handling the IC board, touch a grounded metallic surface so that the static electricity can be discharged.

11-2 PARTS DETAILS & CONNECTIONS

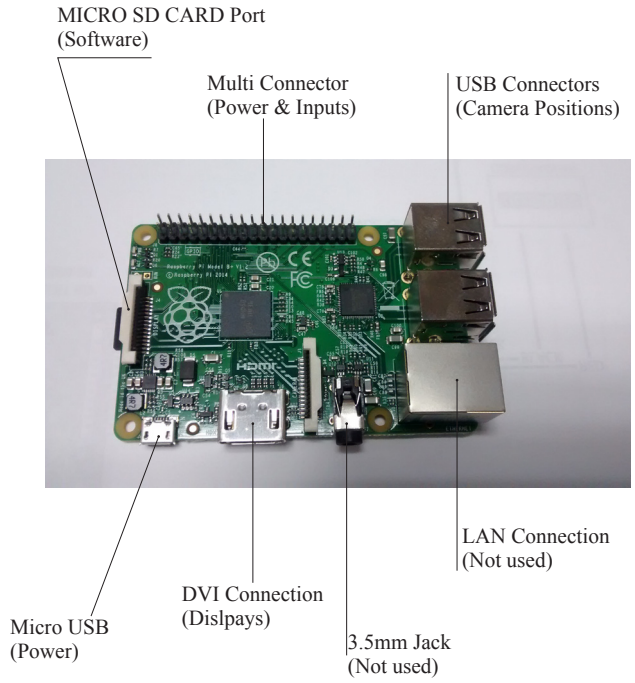

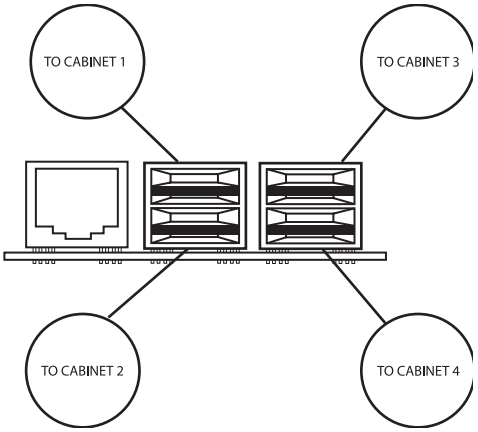

11-3 CAMERA TEST FUNCTION

The CAMERA TEST can be accessed by pressing the single button attached to the INPUT CONNECTOR on the PI Controller.

1. Confirm that the MAINS SW is in the ON position.
2. Press the PI TEST button.
3. The OVERHEAD displays will show a CAMERA TEST routing.
4. All OVERHEAD displays will show the output from CAMERA 1 for a limited time before advancing to CAMERA 2 and so on until all 4 CAMERAS signals have been displayed.
5. Once the 4th CAMERA has been display on the OVERHEAD screens, press the PI Controller TEST button to EXIT.

12 DESIGN-RELATED PARTS

MSR-5010UK

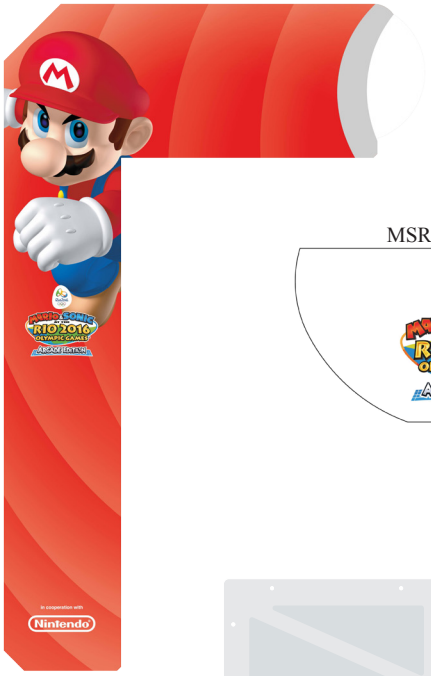

MSR-5015UK

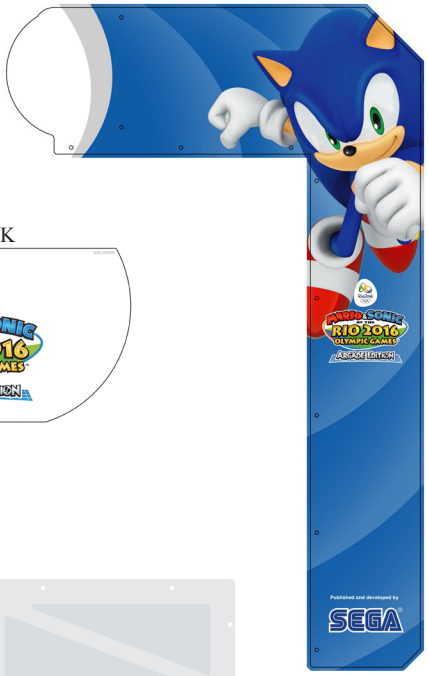

MSR-5058UK

MSR-5005UK

MSR-5006UK

MSR-5020UK

MSR-5021UK

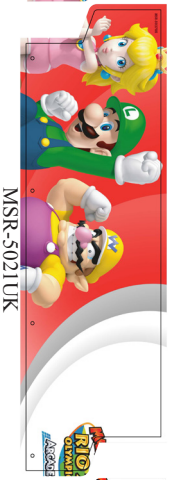

MSR-5022UK

MSR-5023UK

13 PARTS LIST

ASSY TOP MARIO & SONIC MARQUEE 4P

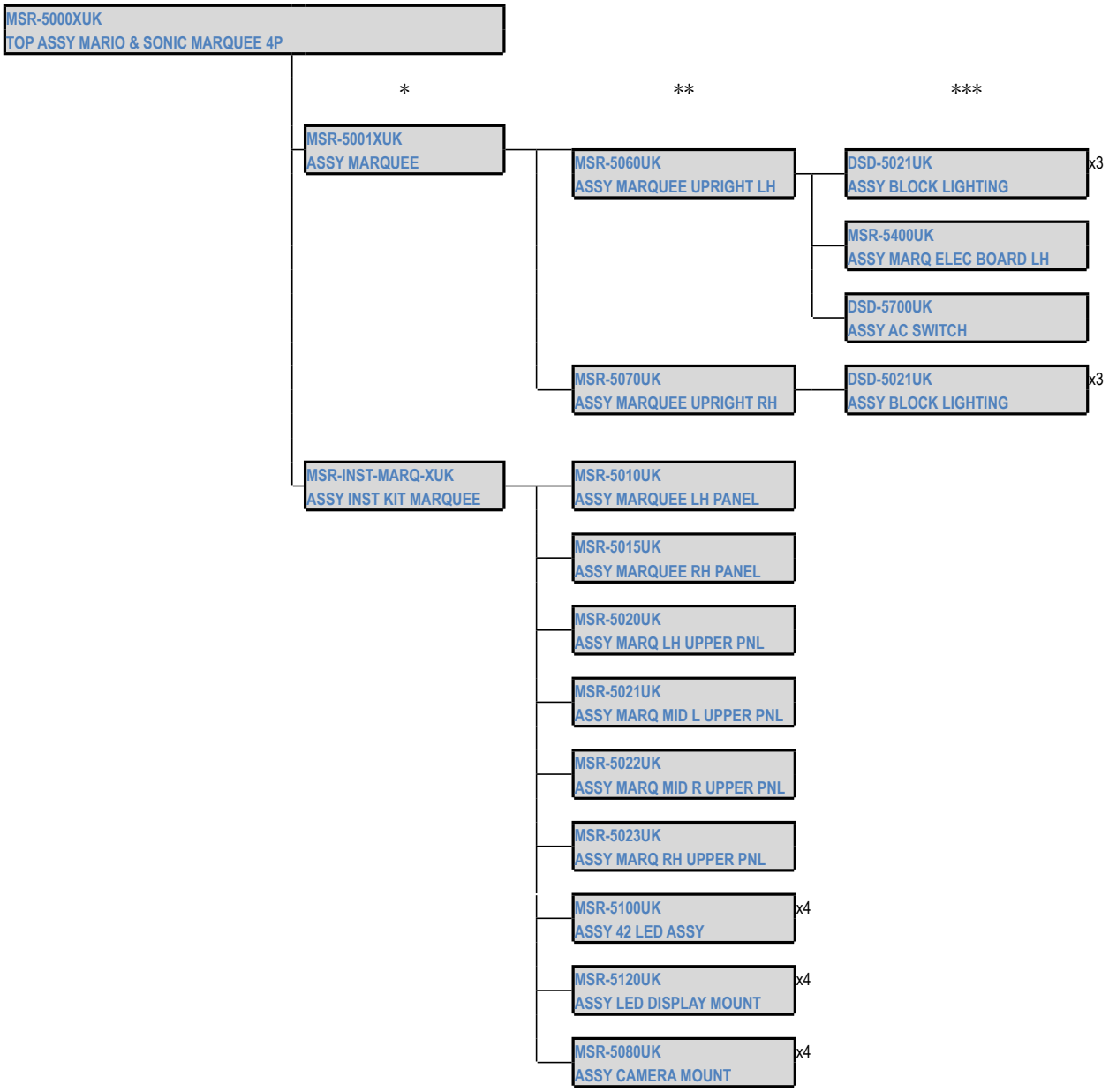

① ASSY TOP MARIO & SONIC MARQUEE (MSR-5000XUK) (D-1/1)

ITEM NO	PART NO	DESCRIPTION	QTY
*1	MSR-5001XUK	ASSY MARQUEE	1
*20	421-7988-91UK	STICKER SERIAL NUMBER UK	2
*21	440-WS0010UK	LABEL WARNING HI-VOLTAGE	2
*22	440-WS0030UK	LABEL WARNING CAUTION	2
*23	LB1046	LABEL TESTED FOR ELEC. SAFETY	1
*24	LB1130	LABEL WEEE WHEELIE BIN	1
*308	MSR-60119UK	WH Pi POWER EXTN	1
*401	MSR-INST-MARQ-XUK	ASSY INST KIT MSR MARQUEE	1
*410	PK0505	PALLET MSR MARQUEE	1
*411	PK0484	SHRINK WRAP DV DX	1
*401	DV-INST-D	ASSY INST DV DX	1
*410	PK0483	PALLET DV DX	1
*411	PK0484	SHRINK WRAP DV DX	1

Please refer to HANDLING PRECAUTIONS (Section 1 of this manual) for locations of Labels.

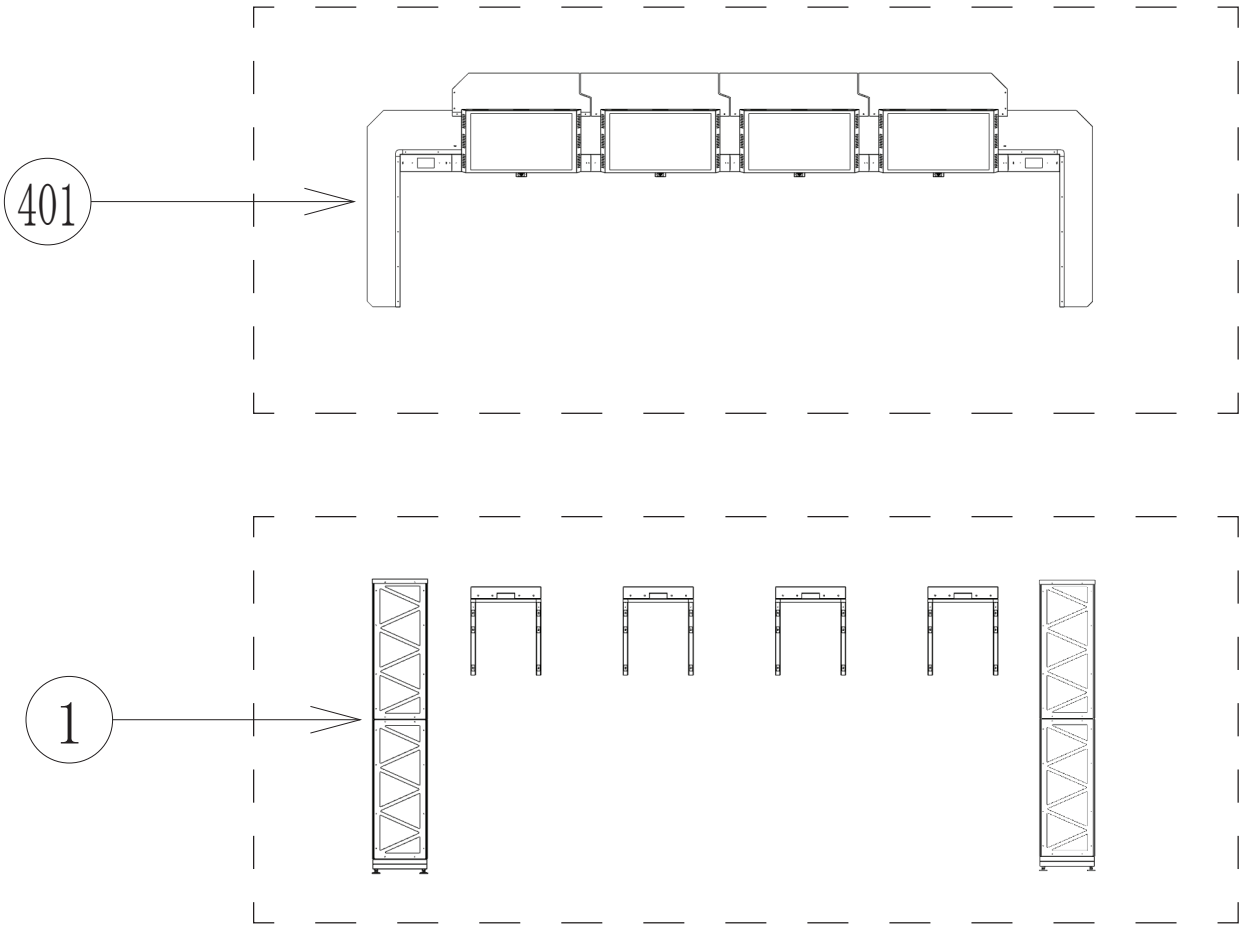

② ASSY MARQUEE (MSR-5001XUK) (D-1/1)

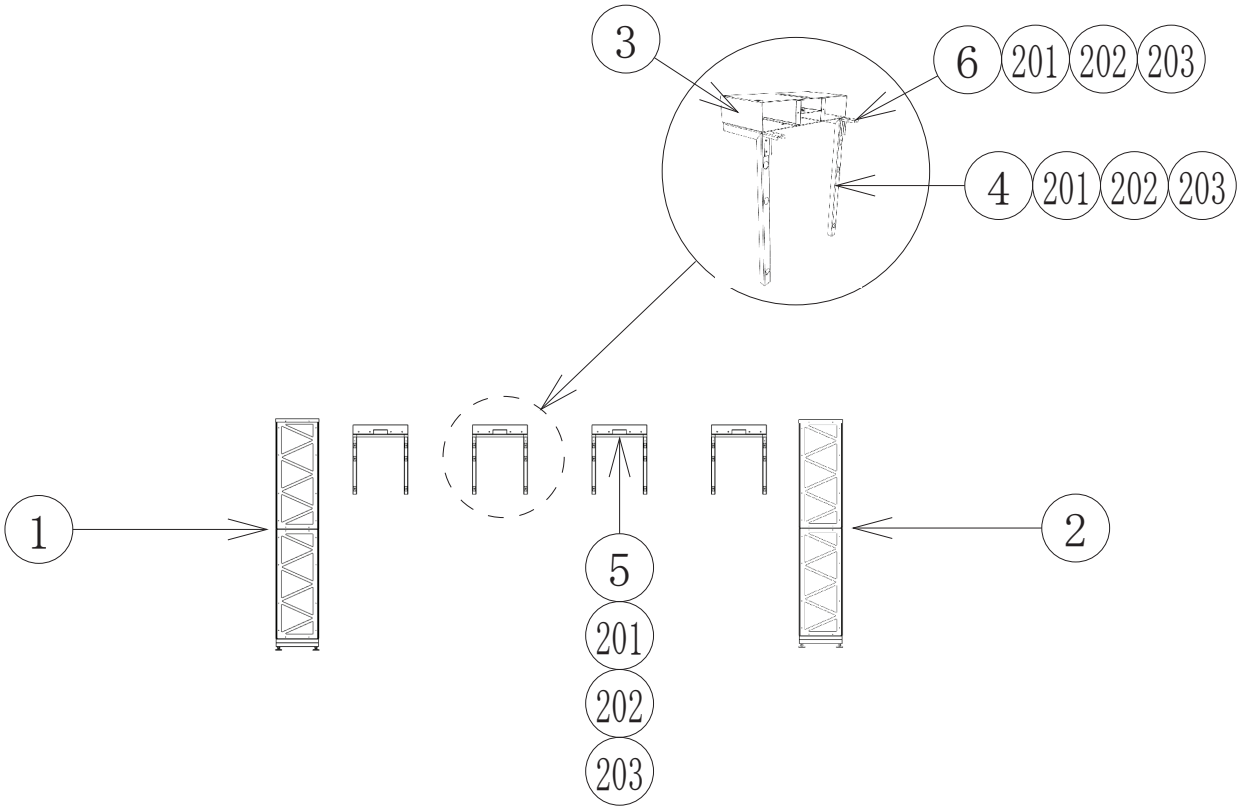

ITEM NO	PART NO	DESCRIPTION	QTY
**1	MSR-5060UK	ASSY MARQUEE UPRIGHT LH	1
**2	MSR-5070UK	ASSY MARQUEE UPRIGHT RH	1
**3	MSR-5032XUK	HOLDER LED ASSY MOUNT	4
**4	MSR-5055UK	BRKT MARQUEE SUPPORT	8
**5	MSR-5056UK	BRKT MARQUEE SUPPORT STRETCHER	4
**6	MSR-5057UK	BRKT WIRE COVER SUPPPORT	8
**201	029-B00620	M6X20 SKT BH PAS	64
**202	060-S00600	M6 WSHR SPR PAS	64
**203	068-652016	M6 WSHR 20OD FLT PAS	64

③ ASSY MARQUEE UPRIGHT L (MSR-5060UK) (D-1/2)

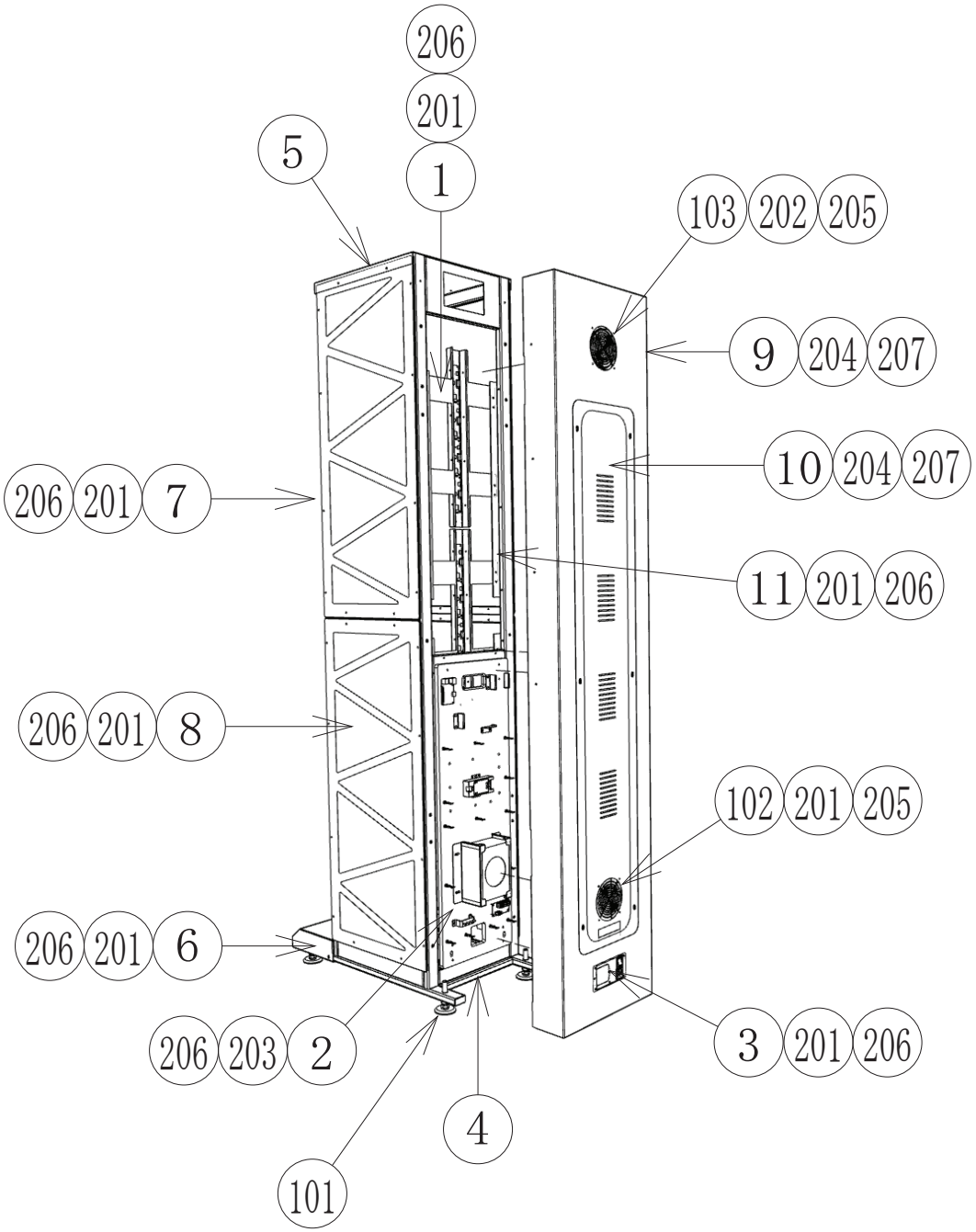

③ ASSY MARQUEE UPRIGHT L (MSR-5060UK) (D-2/2)

ITEM	PART NO	DESCRIPTION	QTY
***1	DSD-5021UK	ASSY BLOCK LIGHTING	3
***2	MSR-5400UK	ASSY MARQUEE ELEC BOARD LH	1
***3	DSD-5700UK	ASSY AC SWITCH	1
***4	MSR-5002UK	FRAME MARQUEE UPRIGHT	1
***5	MSR-5003UK	CAP MARQUEE FRAME UPRIGHT	1
***6	MSR-5004UK	COVER UPRIGHT FOOT	1
***7	MSR-5005UK	PANEL UPRIGHT FRONT	2
****1	MSR-5005-AUK	BLANK UPRIGHT FRONT PANEL	1
***8	MSR-5006UK	PANEL UPRIGHT SIDE	4
****1	MSR-5006-AUK	BLANK UPRIGHT SIDE PANEL	1
***9	MSR-5009UK	COVER MARQUEE UPRIGHT	1
***10	MSR-5036UK	PANEL MARQUEE ELEC ACCESS	1
***11	MSR-5061UK	PANEL UPRIGHT LIGHTING MOUNT	4
***101	601-0004UK-01	LEG ADJ M16X100x70DIA LNUT	4
***102	FN1012	FAN GUARD METAL 120MM (FG-12)	3
***103	260-0012-01UK	FAN DC 12V ROHS	1
***201	029-B00416	M4X16 SKT BH PAS	114
***202	008-B00450	M4X50 TMP BH PAS	4
***203	029-B00425	M4X25 SKT BH PAS	4
***204	029-B00620	M6X20 SKT BH PAS	12
***205	050-F00400	M4 NUT FLG SER PAS	8
***206	068-441616	M4 WSHR 16OD FLT PAS	106
***207	068-652016	M6 WSHR 20OD FLT PAS	12
***208			
***301	MSR-60107UK	WH DIRECT LINK A	2
***302	MSR-60108UK	WH DIRECT LINK B	1

④ ASSY BLOCK LIGHTING (DSD-5021UK) (D-1/1)

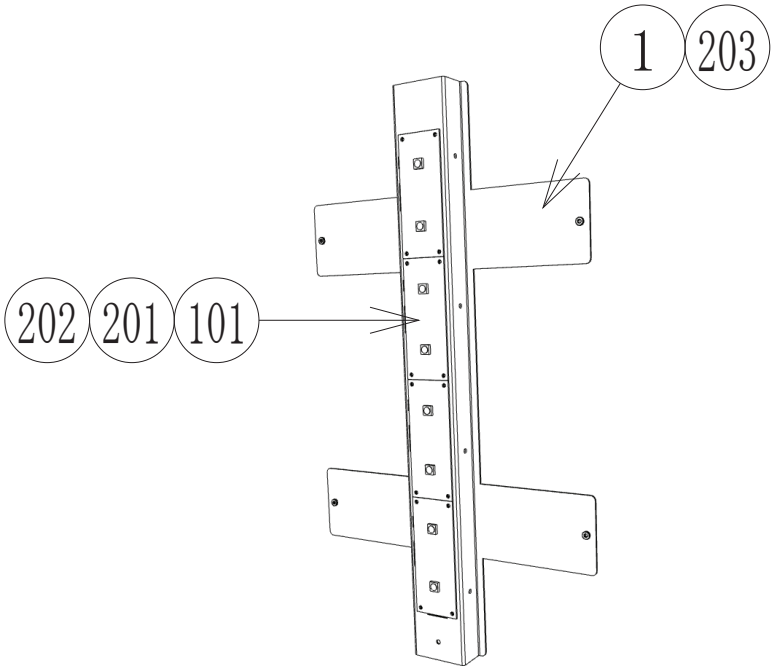

ITEM	PART NO	DESCRIPTION	QTY
***1	DSD-5022UK	MOUNT MARQUEE CAN LED	1
***101	838-0028UK	LED RGB 8X3W CAN	1
***201	000-P00308	M3X8 MSCR PAN PAS	6
***202	068-330808-PN	M3 WSHR 8OD FLT NYLON	6
***203	280-A01013-PM	ROUTER TWIST D10 SO12.7 PANEL MNT	8

⑤ ASSY MARQUEE ELEC BOARD LH (MSR-5400UK)

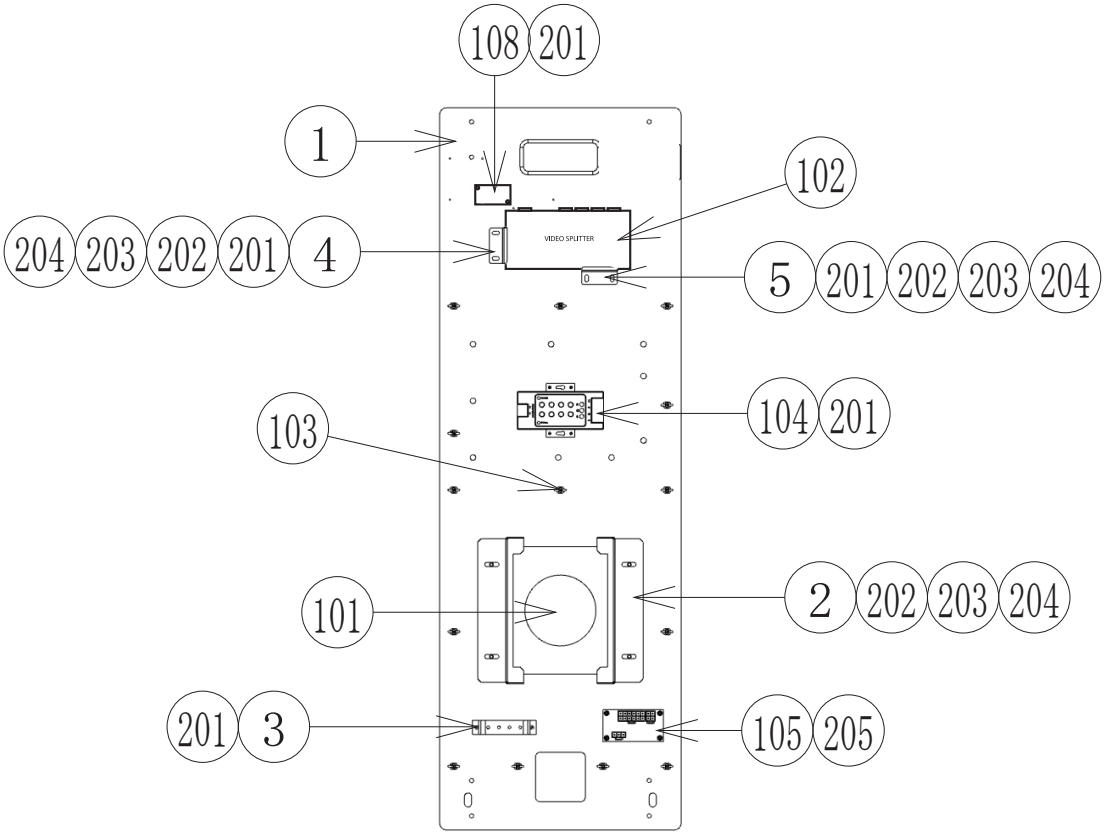

ITEM	PART NO	DESCRIPTION	QTY
****1	MSR-5401UK	BOARD MARQUEE ELEC	1
****2	DSD-5402UK	BRKT PSU MOUNT	2
****3	CFB-4003-01UK	EARTH PLATE	1
****4	DSD-5403UK	BRKT VIDEO SW LH	1
****5	DSD-5404UK	BRKT VIDEO SW RH	1
****101	400-1000-ATX-01	ATX 1KW CORSAIR CP-9020062-UK	1
****102	EP1476	VIDEO SPLITTER 4W HDMI-HDMI	1
****103	280-A01264-WX	ROUTER TWIST D12 SO6.4 WOOD X	12
****104	EP1424	LED CONTROLLER	1
****105	838-14551-02UK	AC DISTRIBUTION BD	1
****108	838-0017UK	TIMER RELAY	1
****201	012-P03512-F	N6X1/2" S/TAP FLG PAS	12
****202	008-B00416	M4X16 TMP BH PAS	8
****203	060-S00400	M4 WSHR SPR PAS	8
****204	068-441616	M4 WSHR 16OD FLT PAS	8
****205	012-P00325	N4X1" S/TAP PAN PAS	8
****301	DSD-60231UK	WH PI CAMERA CONTROL	1
****302	DSD-60225UK	WH PSU LINK	1
****303	MSR-60101UK	WH AC DIST	1
****304	MSR-60102UK	WH AC PSU	1
****305	MSR-60103UK	WH AC TO MONITORS A	1
****306	MSR-60105UK	WH AC DIST	1
****307	MSR-60106UK	WH LED CONTROLLER OUT	1
****308	MSR-60113UK	WH DC LED CONTROLLER	1
****309	600-7012-100UK	HDMI-HDMI CABLE 100cm	1

⑥ ASSY AC SWITCH (DSD-5700UK) (D-1/1)

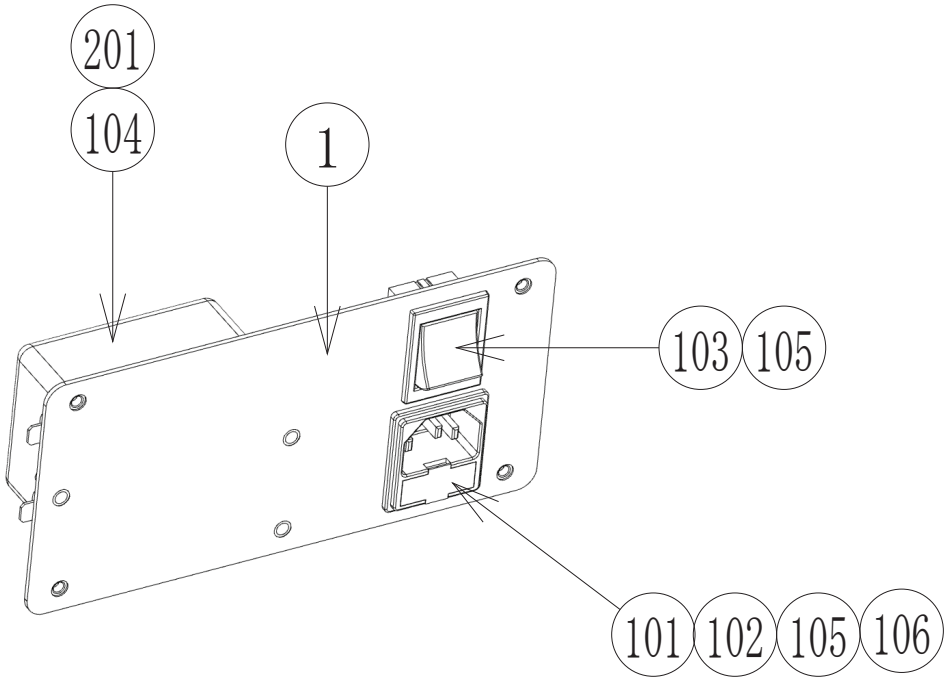

ITEM NO	PART NO	DESCRIPTION	QTY
****1	DSD-5701UK	PLATE MAINS IN	1
****101	EP1302	EUROSOCKET FUSED 10A 250VAC	1
****102	514-5078-5000	FUSE 5X20 CERAMIC SB 500mA	2
****103	SW1109	SWITCH ROCKER 250V AC	1
****104	EP1419	FILTER SCHAFFNER 2030-16-06	1
****105	310-5029-D508	HEAT SHRINK SLEEVING 50.8DIA	4
****106	LB1126-5-250	FUSE LABEL 5A 250V	1
****201	050-F00400	M4 NUT FLG SER PAS	4
****301	DSD-60200UK	WH AC IN	1
****302	600-9040-44K	WH EARTH 400MM M4M4	1

⑦ ASSY MARQUEE UPRIGHT R (MSR-5070UK) (D-1/2)

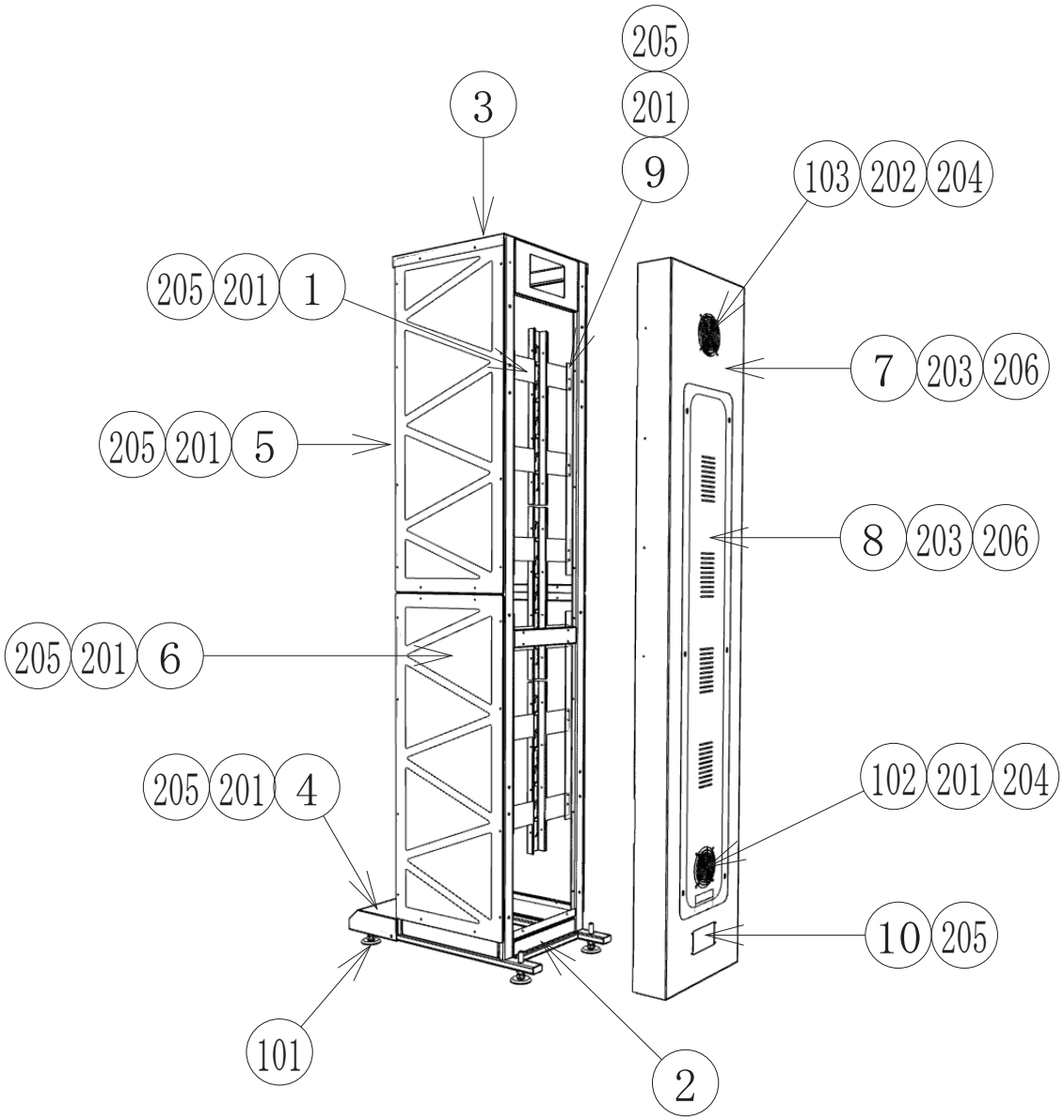

⑦ ASSY MARQUEE UPRIGHT R (MSR-5070UK) (D-2/2)

ITEM NO	PART NO	DESCRIPTION	QTY
***1	DSD-5021UK	ASSY BLOCK LIGHTING	3
***2	MSR-5002UK	FRAME MARQUEE UPRIGHT	1
***3	MSR-5003UK	CAP MARQUEE FRAME UPRIGHT	1
***4	MSR-5004UK	COVER UPRIGHT FOOT	1
***5	MSR-5005UK	PANEL UPRIGHT FRONT	2
***6	MSR-5006UK	PANEL UPRIGHT SIDE	4
***7	MSR-5009UK	COVER MARQUEE UPRIGHT	1
***8	MSR-5036UK	PANEL MARQUEE ELEC ACCESS	1
***9	MSR-5061UK	PANEL UPRIGHT LIGHTING MOUNT	4
***10	MSR-5034UK	PLATE MAINS IN BLANKING	1
***101	601-0004UK-01	LEG ADJ M16X100x70DIA LNUT	4
***102	FN1012	FAN GUARD METAL 120MM (FG-12)	3
***103	260-0012-01UK	FAN DC 12V ROHS	1
***201	029-B00416	M4X16 SKT BH PAS	110
***202	008-B00450	M4X50 TMP BH PAS	4
***203	029-B00620	M6X20 SKT BH PAS	12
***204	050-F00400	M4 NUT FLG SER PAS	8
***205	068-441616	M4 WSHR 16OD FLT PAS	102
***206	068-652016	M6 WSHR 20OD FLT PAS	12
***207			
***301	MSR-60107UK	WH DIRECT LINK A	2
***302	MSR-60108UK	WH DIRECT LINK B	1
***303	MSR-60112UK	WH LED UPRIGHT RH	1

⑧ ASSY INST KIT MARQUEE (MSR-INST-MARQ-KIT (D1/2)

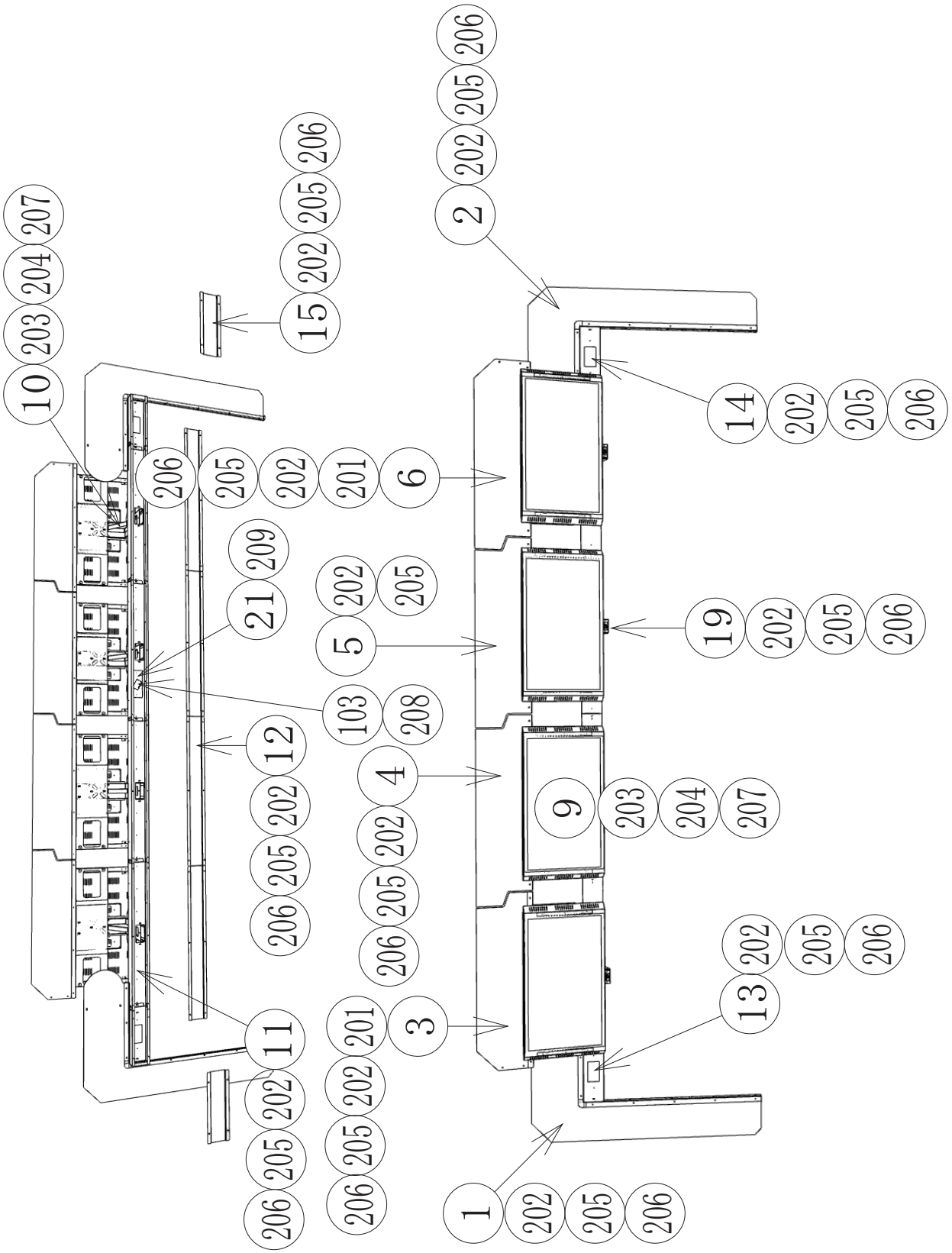

⑧ ASSY INST KIT MARQUEE (MSR-INST-MARQ-KIT (D2/2)

ITEM NO	PART NO	DESCRIPTION	QTY
**1	MSR-5010UK	ASSY MARQUEE LH PANEL	1
**2	MSR-5015UK	ASSY MARQUEE RH PANEL	1
**3	MSR-5020UK	ASSY MARQUEE LH UPPER PANEL	1
**4	MSR-5021UK	ASSY MARQUEE MID L UPPER PANEL	1
**5	MSR-5022UK	ASSY MARQUEE MID R UPPER PANEL	1
**6	MSR-5023UK	ASSY MARQUEE RH UPPER PANEL	1
**9	MSR-5100UK	ASSY 42 LED DISPLAY	4
**10	MSR-5120UK	ASSY LED DISPLAY MOUNT	4
**11	MSR-5045XUK	BRKT MID WIRE COVER REAR	4
**12	MSR-5046UK	BRKT MID WIRE COVER FRONT	4
**13	MSR-5047XUK	BRKT LH WIRE COVER REAR	1
**14	MSR-5048XUK	BRKT RH WIRE COVER REAR	1
**15	MSR-5049XUK	BRKT OUTER WIRE COVER FRONT	2
**19	MSR-5080UK	ASSY CAMERA MOUNT	4
**20	MSR-5058UK	MARQUEE LOGO PANEL	1
**21	MSR-5059UK	BOARD WIRE COVER Pi	1
**101	LM1227	UK MAINS LEAD 10A WITH PLUG	1
**102	LM1246	EUROLEAD 10A EUROPEAN SOCKET	1
**103	610-1002-01UK	RASPBERRY Pi B+ 811-1284	1
**104	280-L00709-OS	STANDOFF 7OD 4ID 9L	4
**201	000-P00408	M4X8 MSCR PAN PAS	4
**202	029-B00416	M4X16 SKT BH PAS	109
**203	020-000820-0B	M8X20 SKT CAP BLK	40
**204	060-S00800-0B	M8 WSHR SPR BLK	40
**205	060-S00400	M4 WSHR SPR PAS	109
**206	068-441616	M4 WSHR 16OD FLT PAS	113
**207	068-852216-0B	M8 WSHR 22OD FLT BLK	40
**208	012-P00320	N4X3/4" S/TAP PAN PAS	4
**209	012-P03512-F	N6X1/2" S/TAP FLG PAS	2
**301	MSR-60103UK	WH AC MONITORS A	1
**302	MSR-60109UK	WH LED UPRIGHT LINK A	1
**303	MSR-60110UK	WH BILLBOARD LIGHTING A	1
**304	MSR-60111UK	WH DC UPRIGHT LINK A	1
**305	MSR-60115UK	WH LED UPRIGHT LINK B	1
**306	MSR-60116UK	WH DC UPRIGHT LINK B	1
**307	MSR-60117UK	WH AC MONITORS B	1
**308	MSR-60118UK	WH BILLBOARD LIGHTING B	1
**309	600-7013-500UK	CA HDMI DVI 500cm	2
**310	600-7013-1000UK	CA HDMI DVI 1000cm	2
**312	600-7015-2000UK	USB EXTN A-A 200CM	2
**313	600-7012-500UK	HDMI TO HDMI 500CM	1

⑨ ASSY MARQUEE LH PANEL (D-1/1)

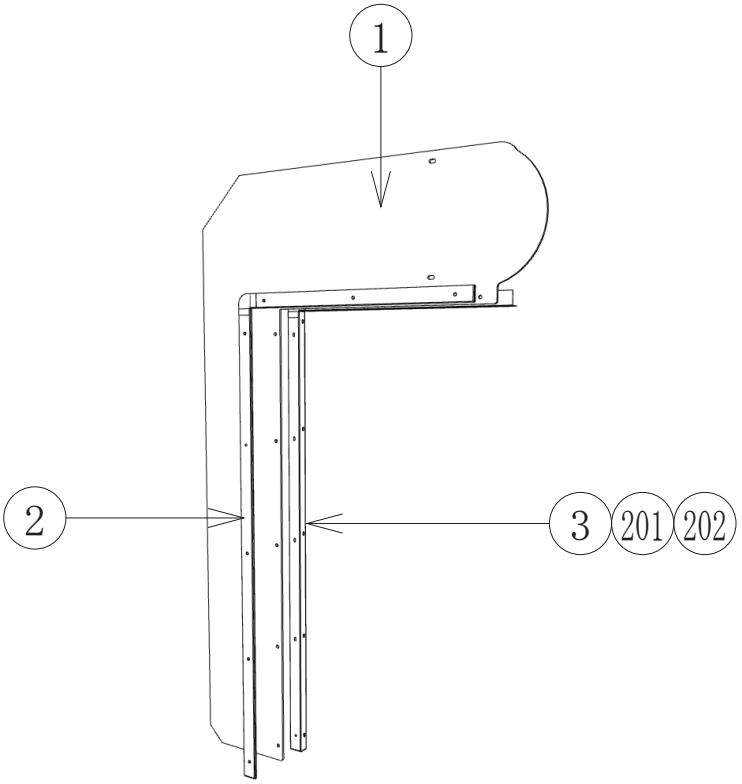

ITEM NO	PART NO	DESCRIPTION	QTY
***1	MSR-5011UK	PANEL MARQUEE LH	1
***2	MSR-5012UK	BRKT MARQUEE LH PANEL FRONT	1
***3	MSR-5013UK	BRKT MARQUEE LH PANEL REAR	1
***201	000-P00408	M4X8 MSCR PAN PAS	8
***202	068-441616	M4 WSHR 16OD FLT PAS	8

⑩ ASSY MARQUEE RH PANEL (MSR-5015UK) (D-1/1)

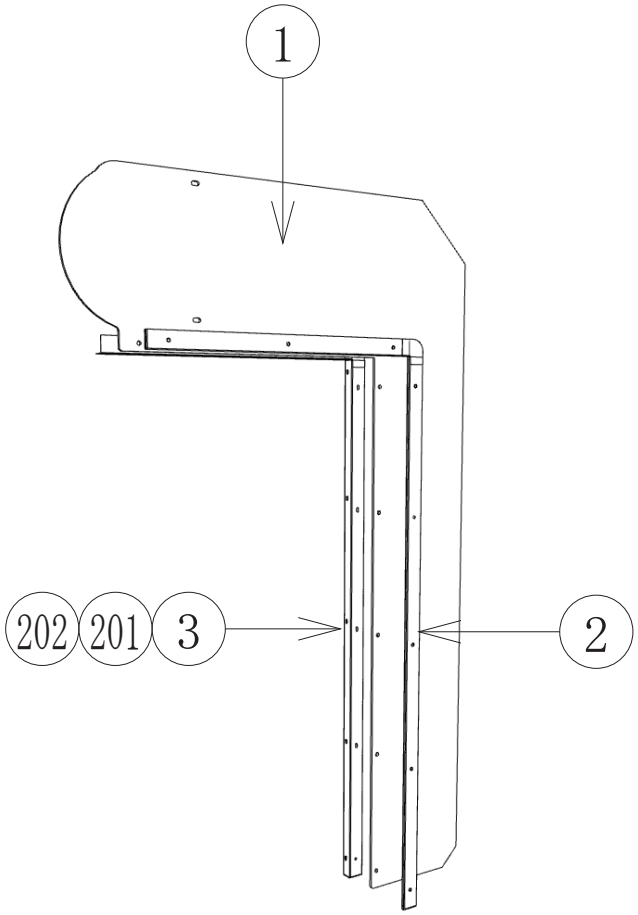

ITEM NO	PART NO	DESCRIPTION	QTY
**1	MSR-5016UK	PANEL MARQUEE RH	1
**2	MSR-5017UK	BRKT MARQUEE RH PANEL FRONT	1
**3	MSR-5018UK	BRKT MARQUEE RH PANEL REAR	1
**201	000-P00408	M4X8 MSCR PAN PAS	8
**202	068-441616	M4 WSHR 16OD FLT PAS	8

(11) ASSY MARQUEE LH UPPER PANEL (MSR-5020UK) (D1/1)

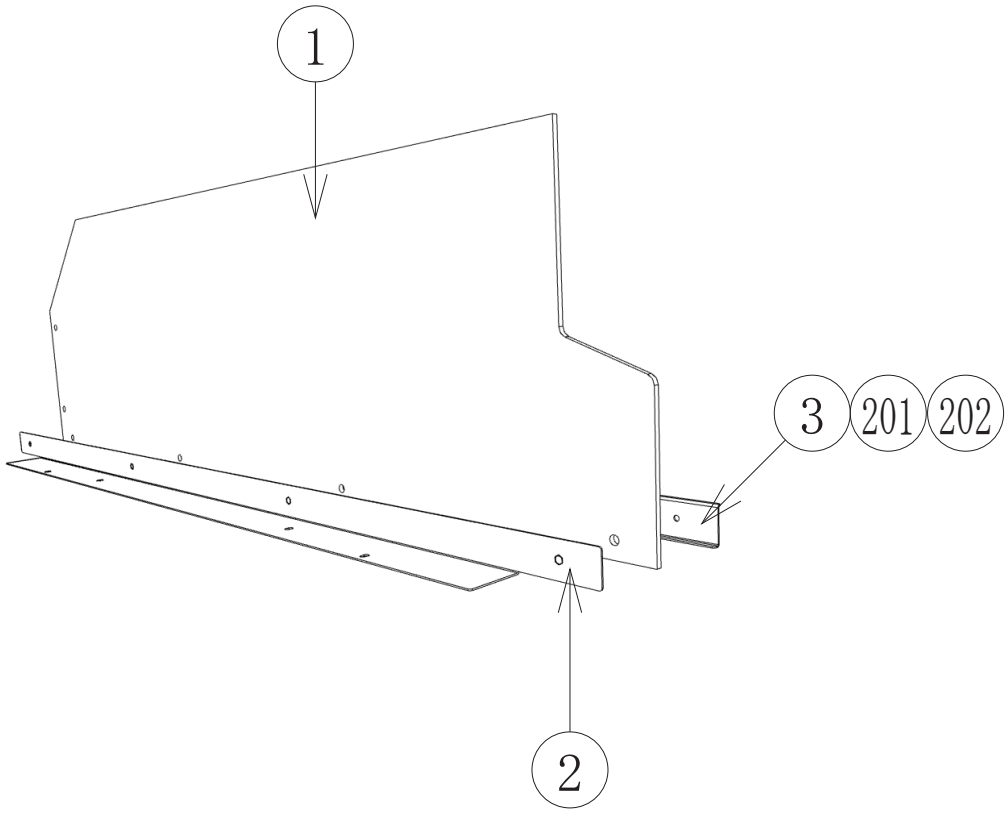

ITEM NO	PART NO	DESCRIPTION	QTY
**1	MSR-5026UK	PANEL MARQUEE UPPER LH	1
**2	MSR-5024UK	BRKT MARQUEE UPPER PANEL FRONT	1
**3	MSR-5025UK	BRKT MARQUEE UPPER PANEL REAR	1
***201	000-P00408	M4X8 MSCR PAN PAS	4
***202	068-441616	M4 WSHR 16OD FLT PAS	4

⑫ ASSY MARQUEE MID L UPPER PANEL (MSR-5021UK) (D-1/1)

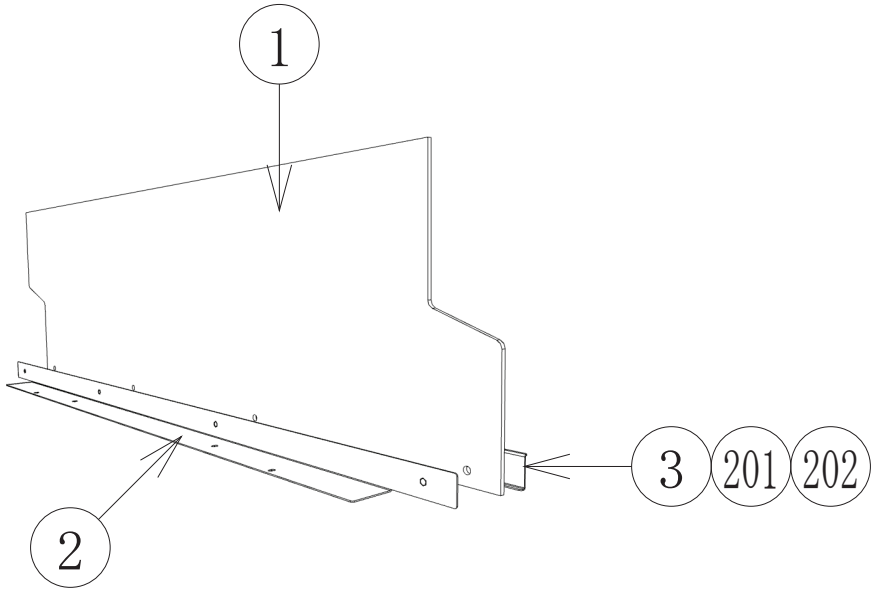

ITEM NO	PART NO	DESCRIPTION	QTY
**1	MSR-5027UK	PANEL MARQUEE UPPER MID L	1
**2	MSR-5024UK	BRKT MARQUEE UPPER PANEL FRONT	1
**3	MSR-5025UK	BRKT MARQUEE UPPER PANEL REAR	1
***201	000-P00408	M4X8 MSCR PAN PAS	4
***202	068-441616	M4 WSHR 16OD FLT PAS	4

⑬ ASSY MARQUEE MID R UPPER PANEL (MSR-5022UK) (D-1/1)

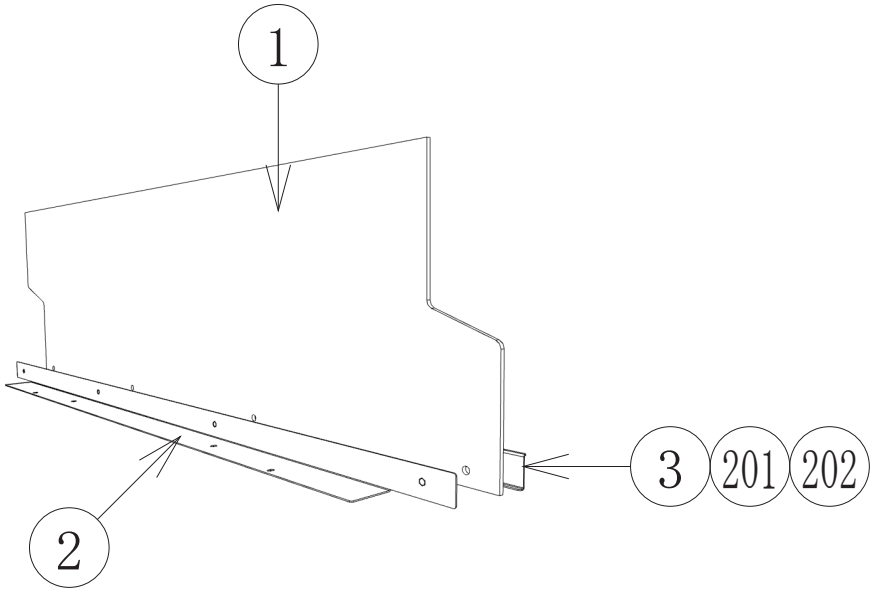

ITEM NO	PART NO	DESCRIPTION	QTY
**1	MSR-5028UK	PANEL MARQUEE UPPER MID R	1
**2	MSR-5024UK	BRKT MARQUEE UPPER PANEL FRONT	1
**3	MSR-5025UK	BRKT MARQUEE UPPER PANEL REAR	1
***201	000-P00408	M4X8 MSCR PAN PAS	4
***202	068-441616	M4 WSHR 16OD FLT PAS	4

⑭ ASSY MARQUEE RH UPPER PANEL (MSR-5023UK) (D-1/1)

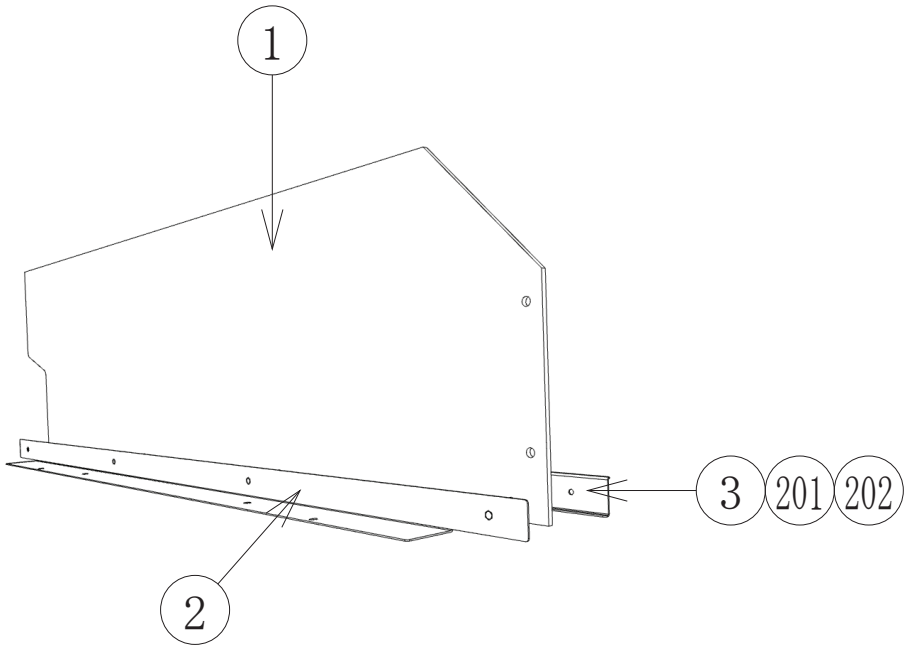

ITEM NO	PART NO	DESCRIPTION	QTY
**1	MSR-5029UK	PANEL MARQUEE UPPER RH	1
**2	MSR-5024UK	BRKT MARQUEE UPPER PANEL FRONT	1
**3	MSR-5025UK	BRKT MARQUEE UPPER PANEL REAR	1
***201	000-P00408	M4X8 MSCR PAN PAS	4
***202	068-441616	M4 WSHR 16OD FLT PAS	4

⑮ ASSY 42 LED DISPLAY (MSR-5100UK) (D-1/2)

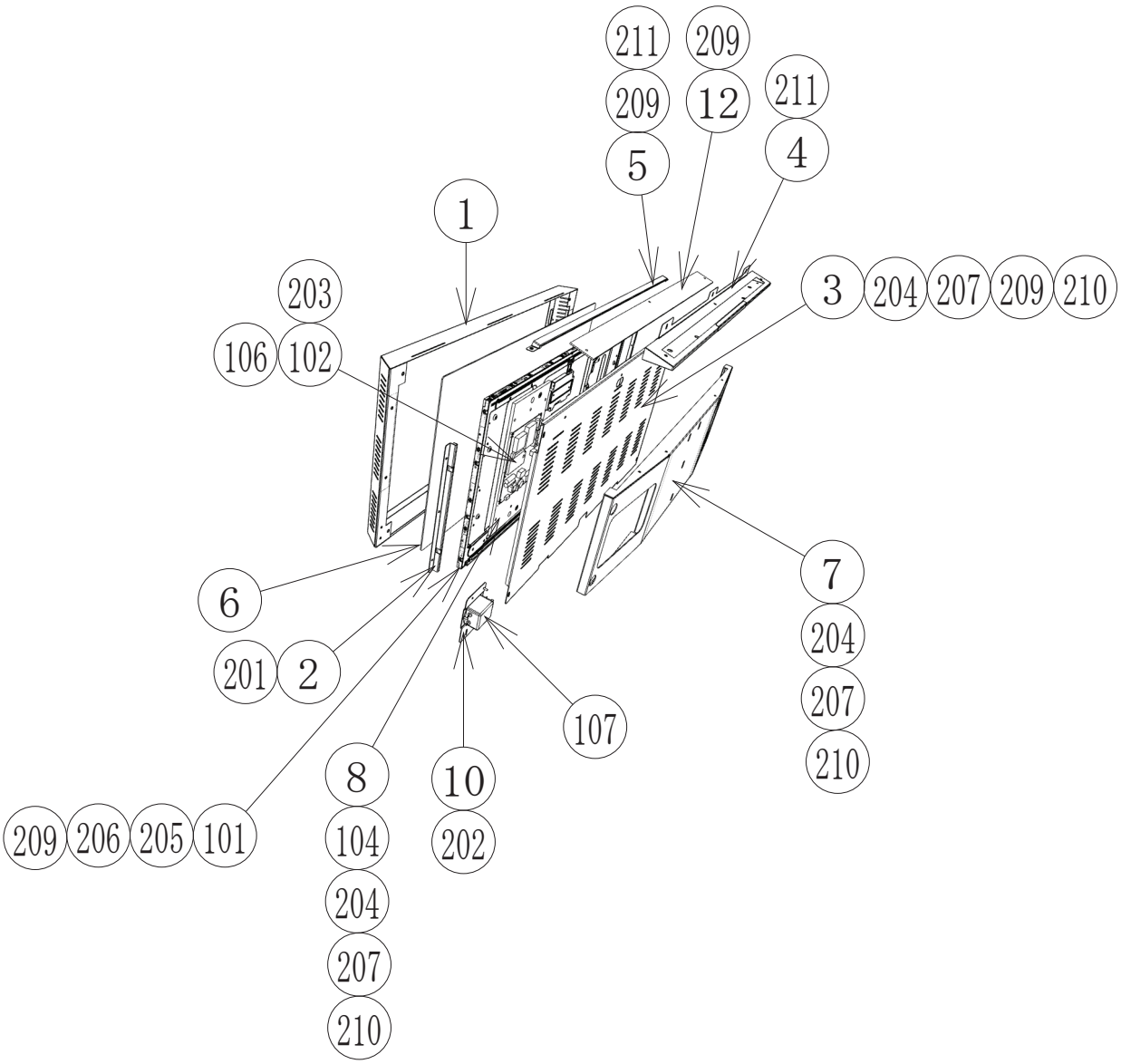

⑮ ASSY 42 LED DISPLAY (MSR-5100UK) (D-2/2)

ITEM NO	PART NO	DESCRIPTION	QTY
**1	MSR-5101UK	ENCLOSURE 42 LED	1
**2	DSD-5102UK	BRKT LED MOUNT	2
**3	MSR-5103UK	COVER BACK	1
**4	MSR-5104UK	BRKT UPPER PANEL LIGHTING	1
**5	MSR-5105UK	BRKT LIGHTING STRIP	1
**6	DSD-5106UK	PERSPEX LED SCREEN PROTECT	1
**7	MSR-5107UK	BRKT LED ASSY LOCATING	1
**8	DSD-5108UK	PNL PRISMA BD DMODUL MOUNT	1
**10	DSD-5109UK	BRKT LED FILTER	1
**11	MSR-5111UK	PLATE OSD COVER	1
**12	MSR-5112UK	COVER LIGHTING STRIP	1
**101	200-6042-02-AUO	DISPLAY 42" LED AUO P420HVN02.0	1
**102	400-160-51224	PSU 42" LED DPS-160AP-2A-PD01	1
**103	440-DS0010UK	STICKER DANGER HIGH VOLTAGE	1
**104	280-A01264-WX	ROUTER TWIST D12 SO6.4 WOOD X	12
**105	OS1230	FOAM STRIP 2MM X 10MM	2.3m
**106	280-L00709-OS	STANDOFF 7OD 4ID 9L	8
**107	EP1419	FILTER SCHAFFNER 2030-16-06	1
**201	000-P00308	M3X8 MSCR PAN PAS	6
**202	000-P00408	M4X8 MSCR PAN PAS	2
**203	012-P00320	N4X3/4" S/TAP PAN PAS	8
**204	029-B00620	M6X20 SKT BH PAS	10
**205	050-F00400	M4 NUT FLG SER PAS	6
**206	060-S00400	M4 WSHR SPR PAS	6
**207	060-S00600	M6 WSHR SPR PAS	10
**208	068-330808-PN	M3 WSHR 8OD FLT NYLON	2
**209	068-441616	M4 WSHR 16OD FLT PAS	16
**210	068-652016	M6 WSHR 20OD FLT PAS	10
**211	008-B00412	M4X12 TMP BH PAS	10
**301	MSR-6003UK	WH ASSY MARQUEE BILLBOARD	1
**302	MSR-60104UK	WH AC MONITOR	1

⑯ ASSY LED DISPLAY MOUNT (MSR-5120UK) (D-1/1)

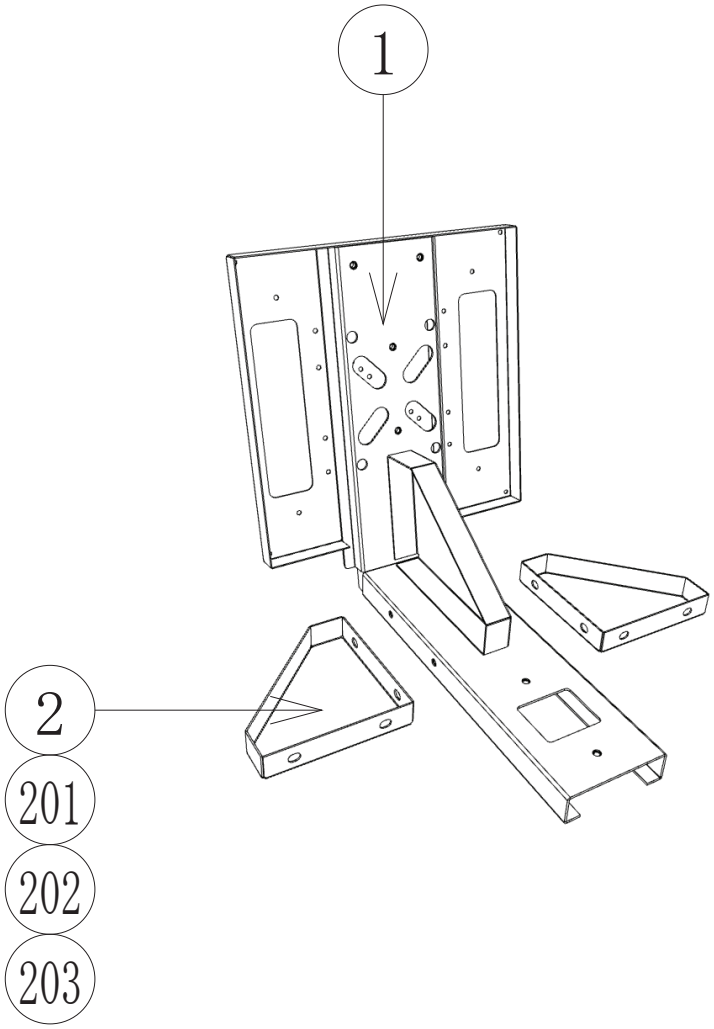

ITEM NO	PART NO	DESCRIPTION	QTY
**1	MSR-5121UK	MOUNT LED ASSY CABI	1
**2	MSR-5122UK	BRKT LED ASSY SUPPORT	2
**201	020-000820	M8X20 SKT CAP PAS	4
**202	060-S00800	M8 WSHR SPR PAS	4
**203	068-852216	M8 WSHR 22OD FLT PAS	4

⑰ ASSY CAMERA MOUNT (MSR-5080UK) (D-1/1)

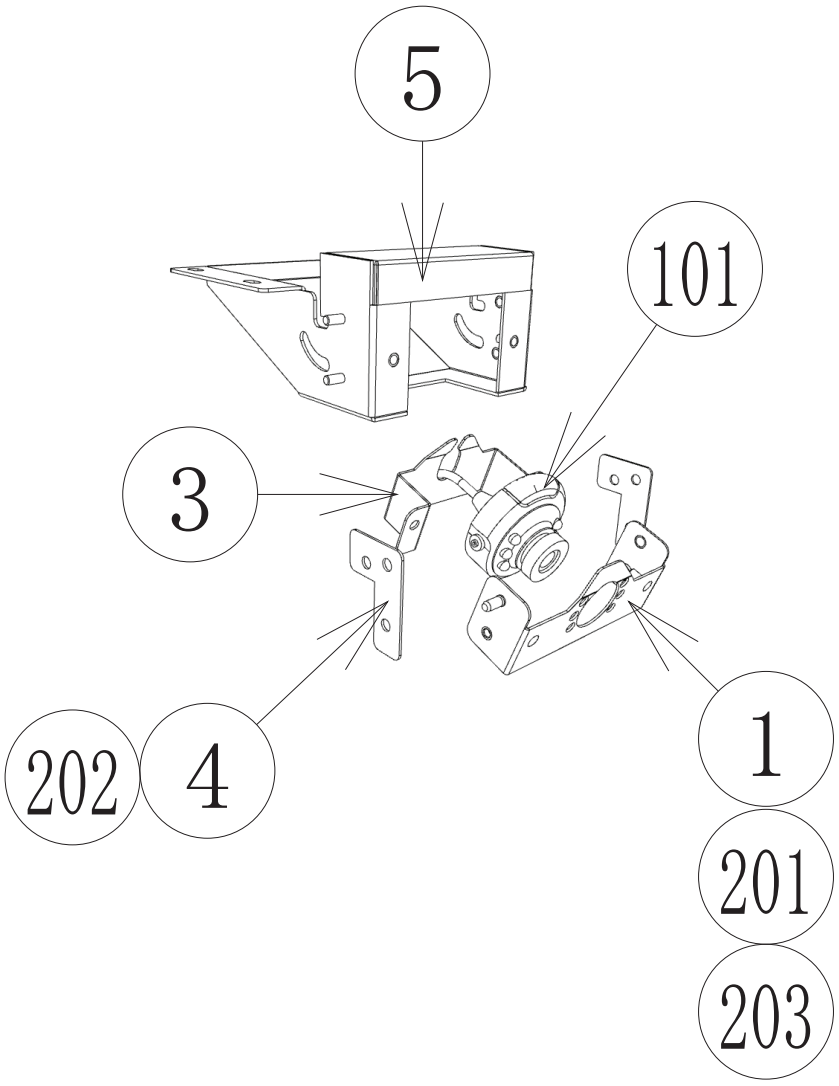

ITEM NO	PART NO	DESCRIPTION	QTY
**1	MSR-5081UK	BRKT CAMERA LOCATING FRONT	1
**3	MSR-5083UK	PLATE CAMERA LOCATING REAR	1
**4	MSR-5084UK	PLATE PIN COVER	2
**5	MSR-5085UK	BRKT CAMERA MOUNT	1
**101	EP1455	WEBCAM BLK 16429 TRUST	1
**201	029-B00412	M4X12 SKT BH PAS	2
**202	050-F00400	M4 NUT FLG SER PAS	6
**203	068-441616	M4 WSHR 16OD FLT PAS	2

14 PARTS & SERVICE CONTACT INFORMATION

- SEGA TOTAL SOLUTIONS -

42 Barwell Business Park
Leatherhead Road,
Chessington,
Surrey,
KT9 2NY
United Kingdom

Parts/Customer Service : +44 (0) 208 391 8060
Technical Support : +44 (0) 208 391 8072

STS
SEGA TOTAL SOLUTIONS

- PLAY IT AMUSEMENTS -

252 Beinoris Drive,
Wood Dale,
IL,
60191,
United States of America

Parts/Customer Service : +01 (874) 364 9787
Technical Support : +01 (874) 364 7775

PLAY iT!
amusements

15 WIRE COLOUR CODE TABLE

⚠ WARNING

The DC power wire color for this product is different from previous SEGA titles. Working from the previous wire colors will create a high risk of fire.

The color codes for the wires used in the diagrams in the following chapter are as follows.

A	PINK
B	SKY BLUE
C	BROWN
D	PURPLE
E	LIGHT GREEN

Wires other than those of any of the above 5 single colors will be displayed by 2 alphanumeric characters.

1	RED
2	BLUE
3	YELLOW
4	GREEN
5	WHITE
7	ORANGE
8	BLACK
9	GRAY

If the right-hand side numeral of the code is 0, then the wire will be of a single color shown by the left-hand side numeral (see the above).

Note 1: If the right-hand side numeral is not 0, that particular wire has a spiral color code. The left-hand side character shows the base color and the right-hand side one, the spiral color.

<Example> 51·····WHITE/RED

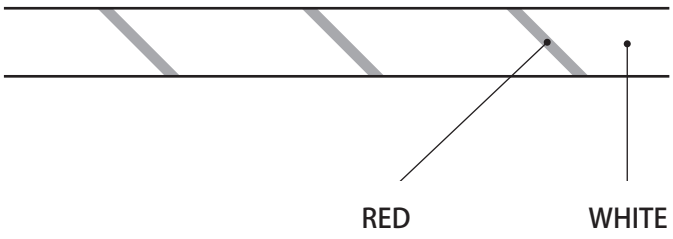

Note 2: The character following the wire color code indicates the size of the wire.

U :	AWG16
K :	AWG18
L :	AWG20
None :	AWG22

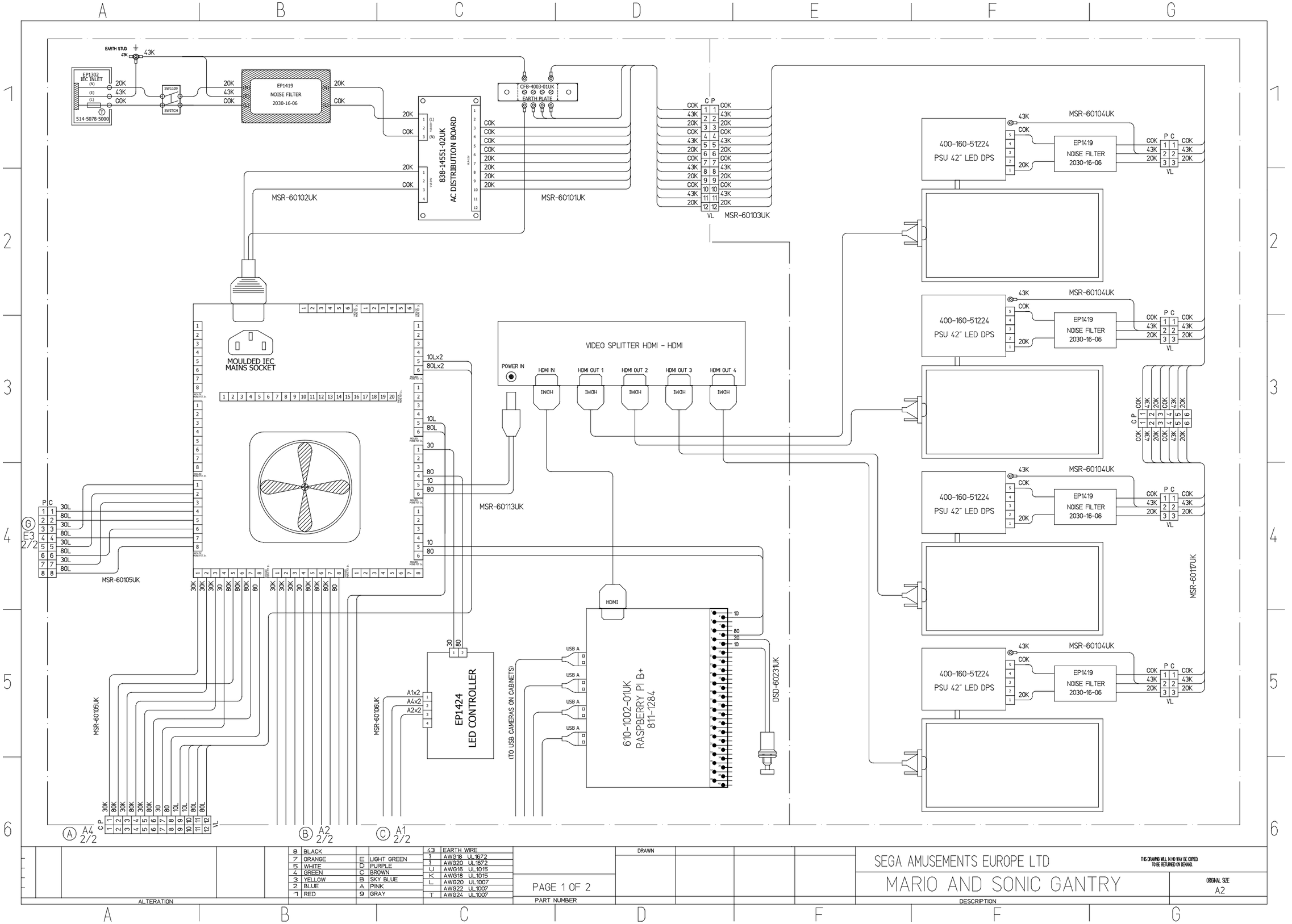

8	BLACK			43	EARTH WIRE	DRAWN	
7	ORANGE	E	LIGHT GREEN	?	AWG18 UL1672		
5	WHITE	D	PURPLE	?	AWG20 UL1672		
4	GREEN	C	BROWN	U	AWG16 UL1015		
3	YELLOW	B	SKY BLUE	K	AWG18 UL1015		
2	BLUE	A	PINK	L	AWG20 UL1007	PAGE 1 OF 2	SEGA AMUSEMENTS EUROPE LTD
1	RED	9	GRAY		AWG22 UL1007		MARIO AND SONIC GANTRY
				T	AWG24 UL1007	PART NUMBER	DESCRIPTION

THIS DRAWING WILL IN NO WAY BE COPIED. TO BE RETURNED ON DEMAND.

ORIGINAL SIZE A2

ALTERATION

(D-2/2)

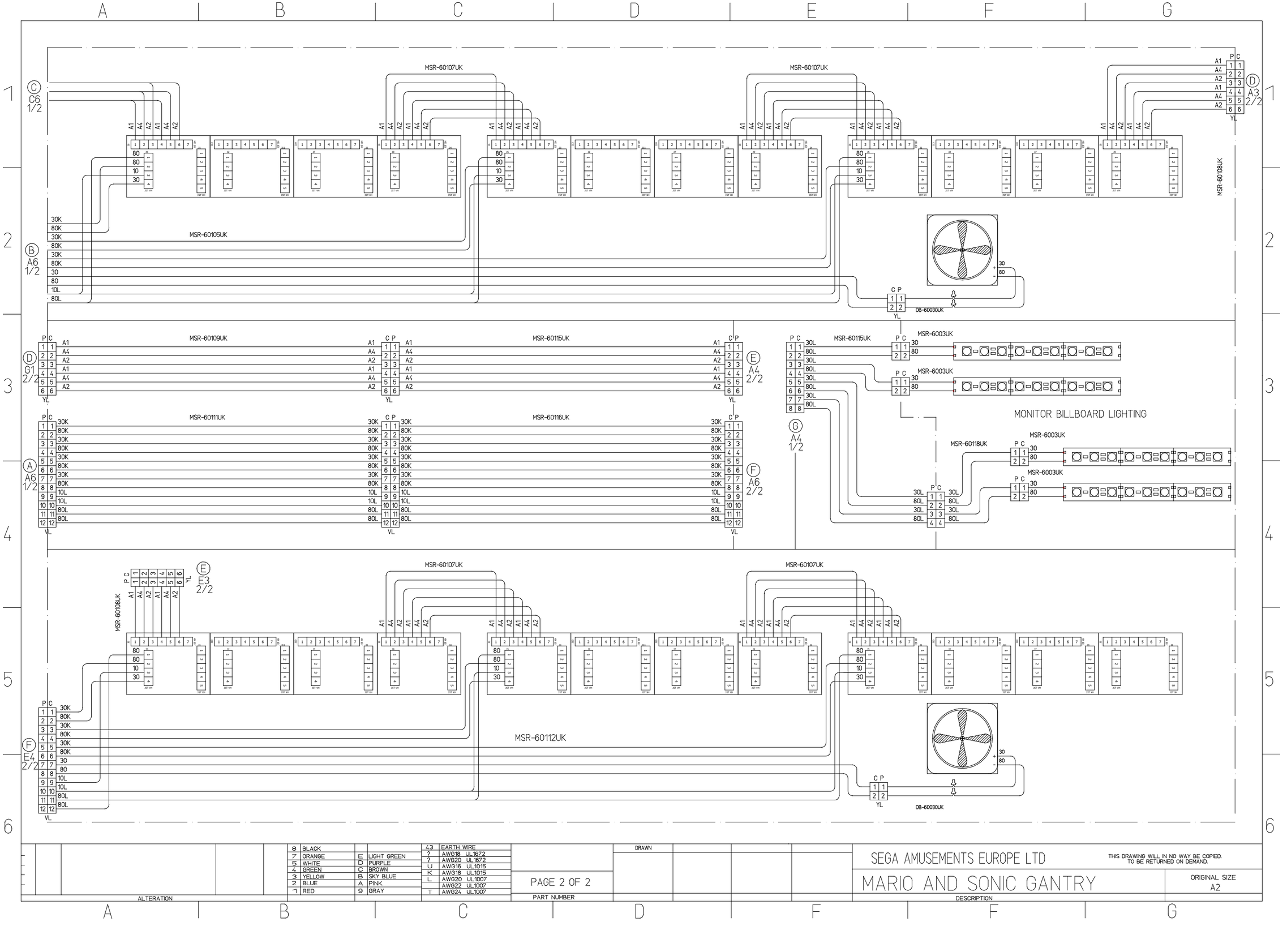

8	BLACK			43	EARTH WIRE	DRAWN	
7	ORANGE	E	LIGHT GREEN	?	AWG18 UL1672		
5	WHITE	D	PURPLE	?	AWG20 UL1672		
4	GREEN	C	BROWN	U	AWG16 UL1015		
3	YELLOW	B	SKY BLUE	K	AWG18 UL1015		
2	BLUE	A	PINK	L	AWG20 UL1007		
1	RED	9	GRAY		AWG22 UL1007		
				T	AWG24 UL1007		

PAGE 2 OF 2

PART NUMBER

SEGA AMUSEMENTS EUROPE LTD

THIS DRAWING WILL IN NO WAY BE COPIED. TO BE RETURNED ON DEMAND.

MARIO AND SONIC GANTRY

DESCRIPTION

ORIGINAL SIZE A2

ALTERATION