www.laigames.com

OPERATOR'S MANUAL

STOP

► READ THIS MANUAL BEFORE OPERATING THE MACHINE.

► KEEP THIS MANUAL FOR YOUR REFERENCE.

ISO 9001 CERTIFIED ORGANIZATION

URS

UKAS QUALITY MANAGEMENT 043-A

ISO 9001: 2000 Cert No.17460

LAI GAMES

Correspondence regarding this machine should be addressed to your closest *LAI GAMES* office, or *LAI GAMES* Distributor.
For contact details, refer to the back page of this manual.

The ***LAI GAMES*** Office is located at
11 Chang Charn Road #04-03 Shriro House
SINGAPORE 159640

LAI GAMES *NOTES*

Dear Customer,

Keep up-to-date with any new Software release or Service Bulletins for this Game.

Check our Website at www.laigames.com click on Product Support, here you find links to all the Bulletins and Software Updates to keep your game in top working Order.

You can also subscribe to our Service Bulletin mail listing at support@mleisure.co.id.

Thanks,

TABLE OF CONTENTS

SAFETY PRECAUTIONS

The following safety precautions and advisories are used throughout this manual and are defined as follows.

*** WARNING! ***
*Disregarding this text could result in **serious injury**.*

*** CAUTION! ***
Disregarding this text could result in damage to the machine.

*** NOTE! ***
- An advisory text to hint or help understanding.

BE SURE TO READ THE FOLLOWING

*** WARNING! ***

Always *turn **OFF** Mains AC power and unplugged the game, before opening or replacing any parts.*

Always *when unplugging the game from an electrical outlet, grasp the plug, not the line cord.*

Always *connect the Game Cabinet to grounded electrical outlet with a securely connected ground line.*

Do Not *install the Game Cabinet outdoors or in areas of high humidity, direct water contact, dust, high heat or extreme cold.*

Do Not *install the Game Cabinet in areas that would present an obstacle in case of an emergency, ie. near fire equipment or emergency exits.*

*** CAUTION! ***

Always *use a Digital Multimeter, logic tester or oscilloscope for testing integrated circuit (IC) logic PC boards. The use of a continuity tester is not permitted.*

Do Not *Connect or disconnect any of the integrated circuit (IC) logic PC boards while the power is **ON**.*

Do Not *use any fuse that does not meet the specified rating.*

Do Not *Subject the game cabinet to extreme temperature variations. Reliability of electrical components deteriorates rapidly over 60 ^{o}C.*

MACHINE INSTALLATION and INSPECTION

When installing and inspecting ***"Stacker Giant"***, be very careful of the following points and pay attention to ensure that the players can enjoy the game safely.

(a) Be sure to turn the power **OFF** before working on the machine.

*** WARNING! ***

Always *Turn* ***OFF*** *mains power before removing safety covers and refit all safety covers when work is completed.*

(b) Make sure the power cord is not exposed on the surface (floor, ground, etc.) where people walk through.

(c) Check that the rubber glide feet levelers are set evenly on the floor so that the game cabinet is unable to roll and is stable.

(d) Always make complete connections for the integrated circuit (IC) logic PC Boards and other connectors. Insufficient insertion can damage the electrical components.

*** CAUTION! ***

Before *switching the machine on be sure to check that it has been set on the correct voltage for your area!*

Refer *to the mains voltage adjustment section of this manual on page 45. Machines are normally shipped on 220V AC unless otherwise specified.*

(e) Only qualified personnel should inspect or test the integrated circuit (IC) logic PC Boards.

(f) If any integrated circuit (IC) logic PC Boards should need servicing. Please contact the nearest distributor. *(Refer to the back page of this manual)*

MACHINE ASSEMBLY

The ***"Stacker Giant"*** is shipped in three main sections, the **Machine Main Cabinet**, the **Light Box Header**, and the **Control Panel**. The **Machine Main Cabinet** contains the prize arms, LED playfield display, and capsule dispenser. The **Light Box Header** is the acrylic roof of the cabinet which contains three fluorescent lamps and prize display down lamps. The **Control Panel** is where the player controls, coin mechanisms, capsule dispenser pipe, and service controls are. The game should not be shipped fully assembled as this could cause damage to all machine sections.

- Position the **Machine Main Cabinet** nearby to its final location. The cabinet has six heavy duty castors to allow easy positioning of the game. Clear the roof top of the cabinet from any obstructions.

- Using at least two persons, lift and position the **Light Box Header** on the top of the **Machine Main Cabinet**, placing the down lamps in the **Light Box Header** right on each lamp opening at the top of the **Machine Main Cabinet**. Using the **four JP M5 x 30mm**, tighten the **Light Box Header** to the **Machine Main Cabinet** from the under side of the Cabinet's roof. Feed the cables from the **Header** to the connectors that come out from the opening at the right back corner of the **Cabinet**. *(Refer to the picture on next page)*

- Place the two header side plates on the right and left side of the **Light Box Header**. Slid the horizontal part into the gap in the upper part of the **Machine Main Cabinet** and tighten them to the **Header** using the **four Hexagonal Socket Head M5 x 15mm bolts** and to the **Machine Main Cabinet** using the **two JP M6 x 30mm bolts**. *(Refer to the picture on next page)*

- Place the two pairs of header back plates on the top of the **Machine Main Cabinet**, behind the **Light Box Header**. Tighten the plates using the **two M6 x 15mm bolts** and **the four 4 x 15mm self taping screws**. *(Refer to the picture on next page)*

- Position the **Control Panel** assy in front of the **Machine Main Cabinet**, right in the middle part of the cabinet. Make sure that the capsule dispenser's ball feeder in the **Machine Main Cabinet** is plugged in to the pipe in the **Control Panel**. Tighten the **Control Panel** to the **Machine Main Cabinet** using the **four Wing M5 x 15mm bolts** (left and right side of **Control Panel**) and **two Hexagonal Head M6 x 15mm bolts** (lower part of **Control Panel**). Feed the cables from the **Control Panel** through the middle part of the **Machine Main Cabinet**. Mate all the connectors together; they are keyed to prevent incorrect connection. *(Refer to the picture on next page)*

MACHINE ASSEMBLY DIAGRAM

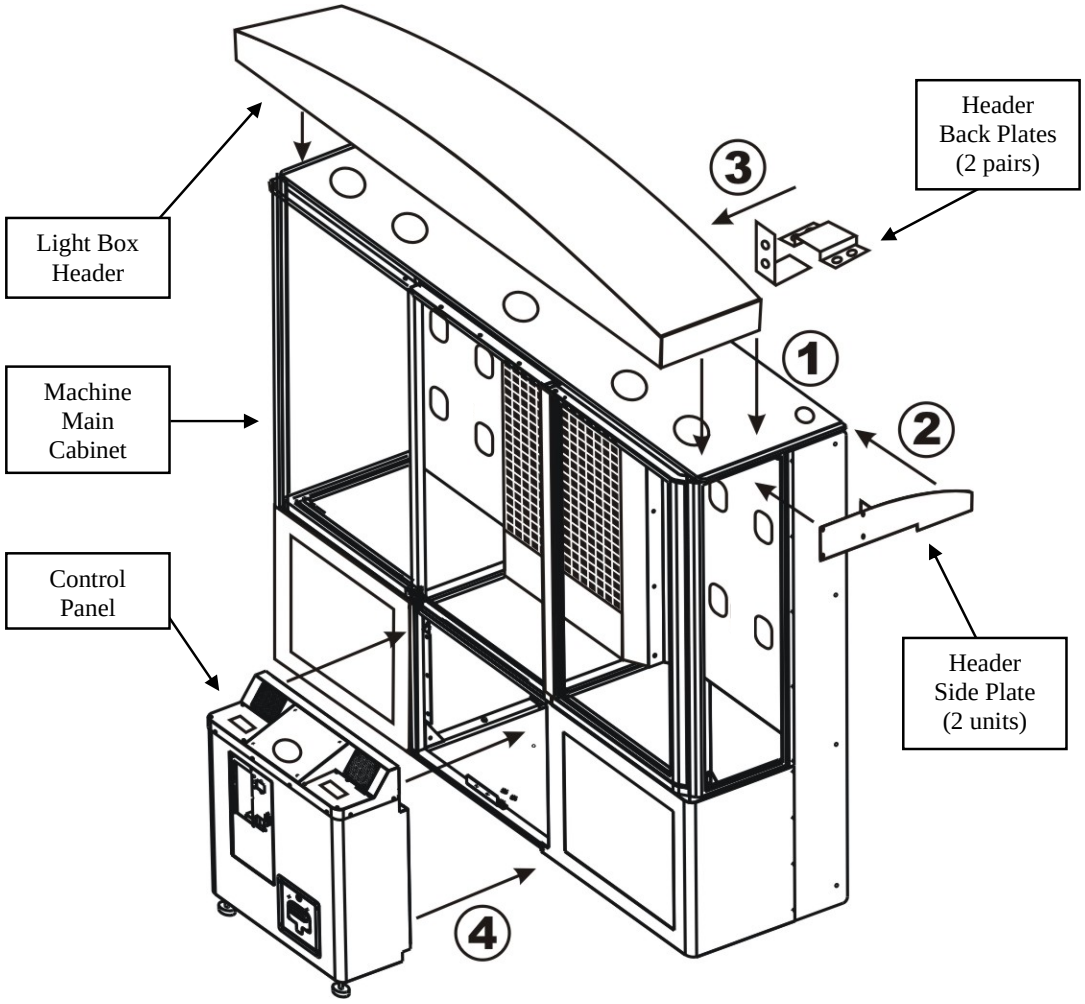

HEADER SIDE PLATE ASSEMBLY DIAGRAM

As viewed from rear

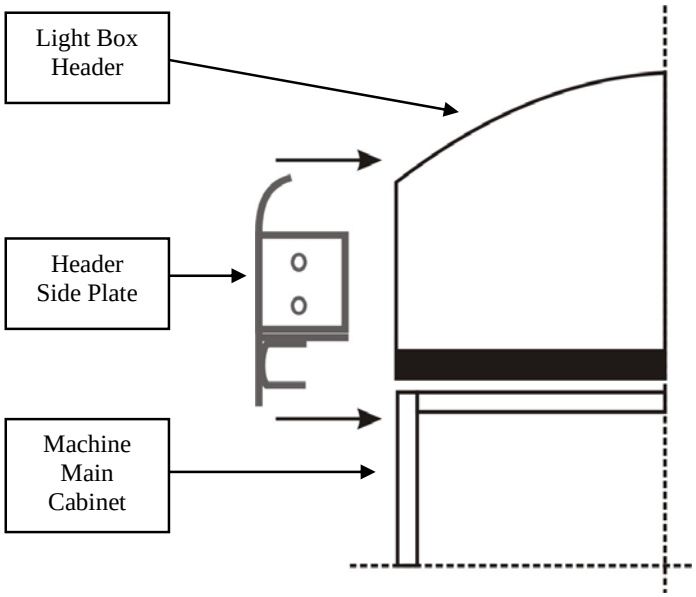

PRIZE BOX GATE TEST

The ***"Stacker Giant"*** comes with two big prize boxes that are installed in the lower left and right of the **Machine Main Cabinet**. Each of these boxes has a rolling gate that will open when a player wins a prize. Testing the gate is as follows:

1. Press the **GATE TEST** button on the Service Panel.
2. Press and hold the yellow **OPEN** button on the Service Panel to open the prize box gates manually.
3. Press and hold the white **CLOSE** button on the Service Panel to close the gates manually.
4. The machine will automatically switch back to **GAME MODE** (able to detect prize in prize box) after 5 minutes.

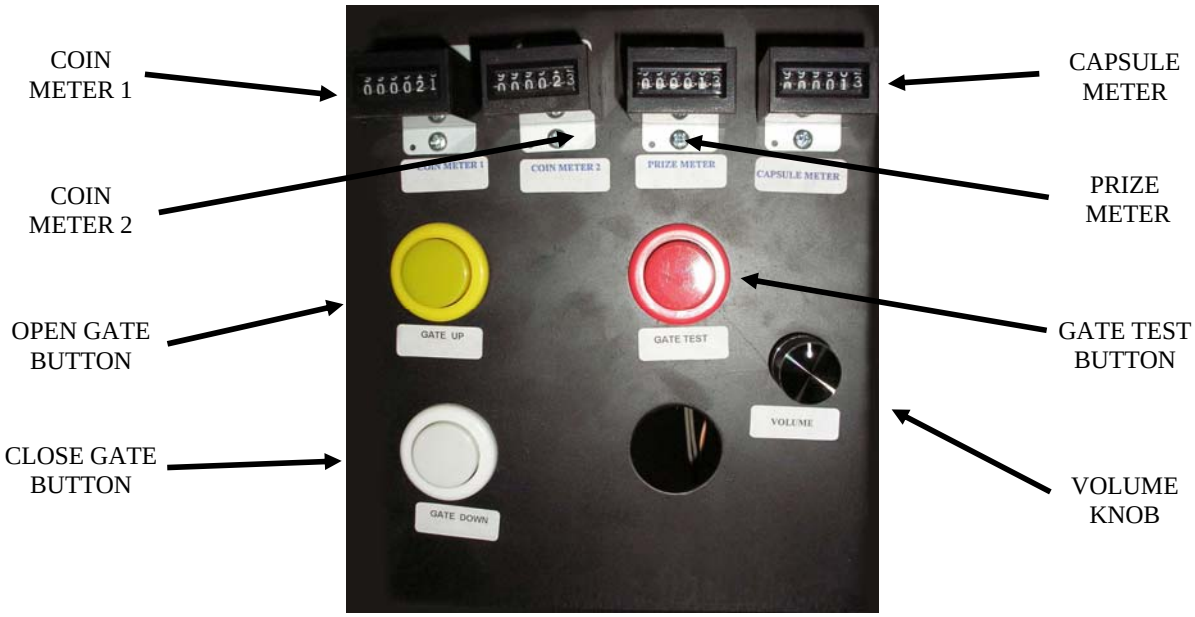

*** NOTE! ***

- Both gates will operate simultaneously when opening and closing.
- Operating the Gate Test Mode in game play will result in an error 8 message.

INTRODUCTION

CONGRATULATIONS! You have just bought the ***"Stacker Giant",*** another sensational product from LAI games. This game is based on the popular Stacker prize redemption game. ***"Stacker Giant"*** features an impressive giant cabinet with heavy duty prize arms and the ability to dispense over sized prizes. With a bright and attractive display, simple but exciting game, choices of major and minor prizes, we feel that the ***"Stacker Giant"*** will make a great addition at any location, on or off site.

We hope you take the time to read this manual and learn about the many other features and user-friendly adjustments that can be made to "fine-tune" the game for maximum earning potential.

DESCRIPTION

- The ***"Stacker Giant"*** is a quick stop skill game that is simple and fast to play and learn. The player must press the start/stop button to stack the moving blocks on top of each other. Each time the player successfully builds another layer onto the pile of blocks, the next level is progressively harder.

Once the player reaches the Minor prize level, they get to choose between a minor prize or continue to play on for the major prize. Nearly all of your customers will try to the major prize level.

PACKAGING

- At delivery, the machine should arrive in good condition. To move the packaged machine for transport or placement, use a forklift and take care not to hit the package or stack heavy objects on top, as this may cause damage to the machine.

CONTENTS

- The ***"Stacker Giant"*** machine main cabinet Assy on castors
- The ***"Stacker Giant"*** Light box Header Assy
- The ***"Stacker Giant"*** Control Panel Assy
- Keys: 2 × coin door keys
  2 × ticket door keys
  2 × back door keys
- Operator's manual
- IEC Power Cord (In cash box)
- Accessories (In cash box)

SPECIFICATIONS

DIMENSIONS

■ Weight:	435 kg	(959lb)
■ Height:	2330mm	(91-2/3”)
■ Width:	1900mm	(74-7/8”)
■ Length:	1040mm	(40-7/8”)
■ Power:	Maximum	470 W – (220V @ 2.1 A) (120V @ 3.8 A)
	Average	250 W – (220V @ 1.2 A) (120V @ 2 A)

ELECTRIC SUPPLY

- The game has the option to operate on a 110V, 120V, 220V or 240V AC 50/60Hz single phase mains electric supply.

The supply must be a three wire grounded supply.

*** CAUTION! ***

Before *switching the machine on be sure to check that it has been set on the correct voltage for your area!*

Please *Refer to the mains voltage adjustment section of this manual on page 45. Machines are normally shipped on 220V AC unless otherwise specified.*

LOCATION REQUIREMENTS

■ Ambient temperature:	between 5°C and 40°C.
■ Ambient humidity:	Low
■ Ambient U.V. radiation:	Very low
■ Vibrations level:	Low

HOW TO PLAY

PLAYERS AIM TO BUILD A VERTICAL STACK OF BLOCKS TO WIN PRIZES

- Insert coin/s. *(The exact amount of coins per play is dependant on Program settings P1 through to P6. See program settings, page 18 for details).*
- Press the Start/Stop button to start a game;
- Press the Start/Stop button to stop the moving blocks at the desired position;
- Build the stack of blocks by stopping each level of blocks on top of each other;
- Players win a prize when either the *Minor* or *Major* level is reached;
- On a *Minor* prize win, players can elect to get a *Minor* Prize or press the Continue button and try for the *Major* Prize Level.
  (The player will not win any prizes if they choose continue & fail to reach the Major level)
- Game ends any time the player fails to stop the moving blocks at the desired position, or they choose a Minor Prize.

Prize Selection

- When you reach the minor level, you can elect to get a minor prize and stop the game or continue the game to try for the major level. You can not choose the prize when you win in this level. The machine will dispense a minor prize for you.
- If you won a major prize, you can select from any one of the major prize arms by pressing the Select button to step through the Prize Arms.
- Press the Start/Stop button to dispense a prize from the selected prize arm, or from minor prize capsule dispenser.

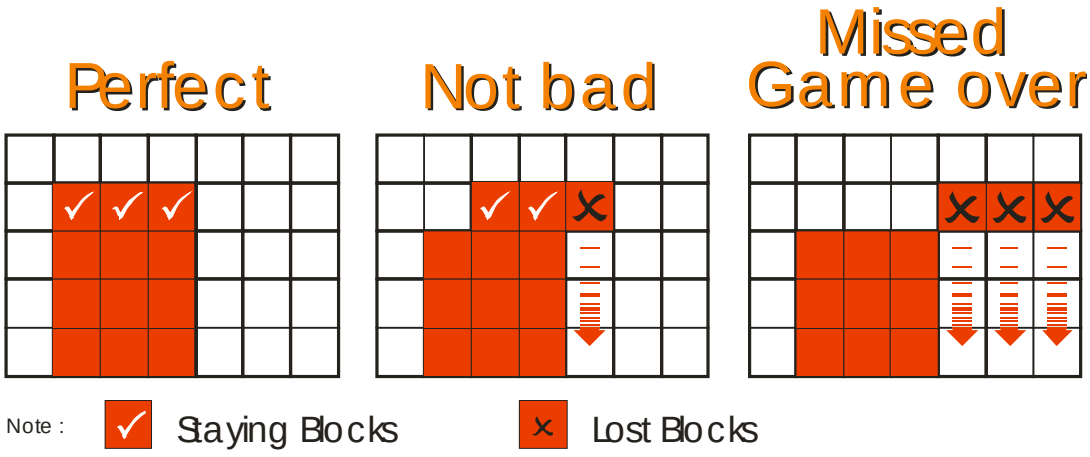

FITTING PRIZES TO THE PRIZE ARM

STEP ONE: Removal of Prize Locking Pin.

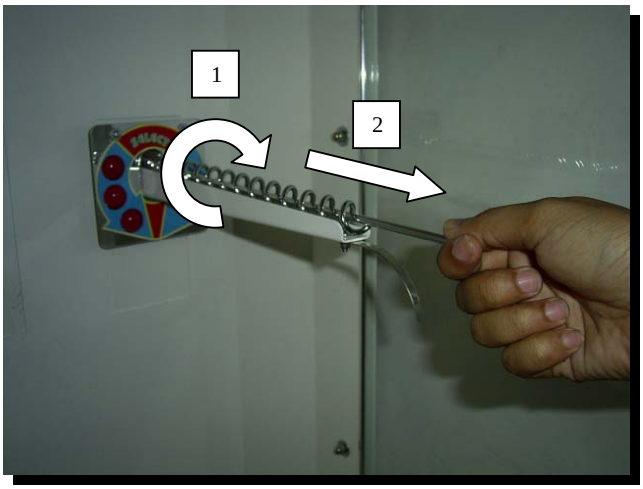

1. Unscrew the Prize Locking pin (**left-hand thread**), by turning it in a clockwise direction.

2. Remove the pin by pulling it all the way out.

*** NOTE! ***
Stacker Giant is shipped from the factory with the Locking Pins in the Cashbox.

STEP TWO: Attachment of Hanging Ties.

- Attach the prizes securely to the Hanging Ties.

*** NOTE! ***
Be sure to allow a loose, 4-finger gap in the 'hanging tie' to ensure that the 'hanging tie' does not interfere with the operation of the Prize Arm mechanism.

STEP THREE: Loading of Prizes.

- Load the prize arm by sliding the Hanging Tie over the entire arm, as shown making sure that the prizes are facing towards the customer.

STEP FOUR: Correct positioning of prizes.

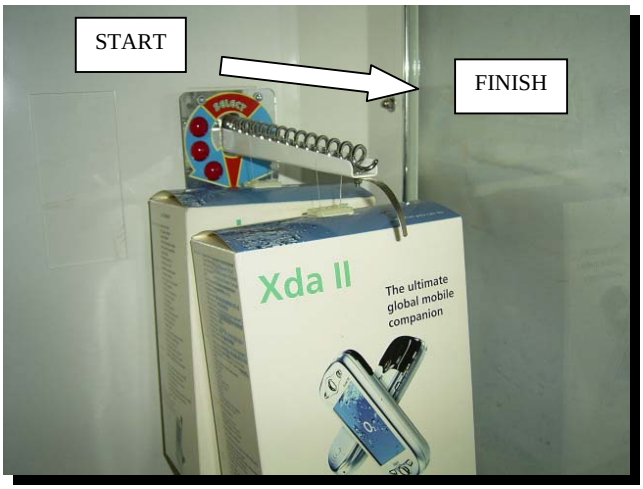

- Position the Hanging Ties on the prize arm as shown. Space the prizes apart on the arms so they well presented, looking from the front. Ensure the prizes do not restrict the viewing of the LED display. Do not have the prizes spaced more than '2/3rd an arm' apart, or the prize arm will time out and display error Err4.

*** NOTE! ***
If completely filling the prize arm, start filling the prize arm from the back and work your way towards the front.

STEP FIVE: Reinsertion of Prize Locking Pin.

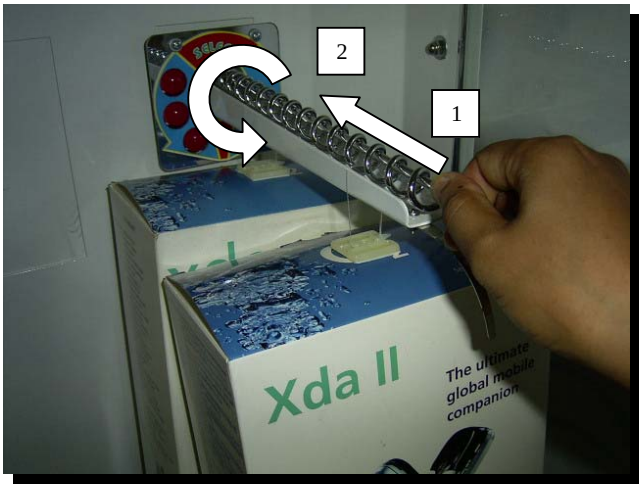

1. Reinsert the Prize Locking pin by positioning it in the centre of the spiral making sure it **ALWAYS** stays **ABOVE** the hanging ties.

2. Re-fit and tighten the Prize Locking pin (**Left-hand thread**), by turning it in anti-clockwise direction.

STEP SIX: Correct positioning of Prize Locking Pin.

- Ensure the Prize Locking Pin **ALWAYS** remains **ABOVE** the Hanging Ties.

*** NOTE! ***
Correct fitting of the Prize Locking Pin prevents the prizes from falling of the arm by shaking or tilting the cabinet.

FILLING CAPSULE DISPENSER

Stacker Giant also comes with capsule dispenser already fitted in the machine. Machine operator will need to fill the dispenser with capsules as minor prize. To fill the dispenser with capsules is as follows:

1. Open one of the main cabinet's front door and clear the front display holder from any capsules or balls.

2. Unscrew the two **JP (+) M4 x 12mm bolts** on both sides of the display holder.

3. Take the display holder off from the main cabinet so you can see the inside of the capsule dispenser.

4. Fill the dispenser with capsules until it is full.

5. Put the display holder back to its original position in the main cabinet and re-tighten using the bolts.

6. Place samples of capsules in the display holder as a display.

*** NOTE! ***

- You can also fill the dispenser from the back of the machine if accessible.
- Highly recommended to use **round capsule** use diferrent shape may cause jamming on capsule tray.

3” TO 2” CAPSULE DIPENSER ADAPTER

4 Pcs Stainless Steel Adapter supplied.

Step 1 : Open Front Door Left and Right, access the Capsule Tray under the LED display remove 2 Screws on each side of capsule tray.

Step 2 ; Lift the Capsule tray, access the Capsule dispenser from above and position the 4 adapters in kit as picture shown underneath,

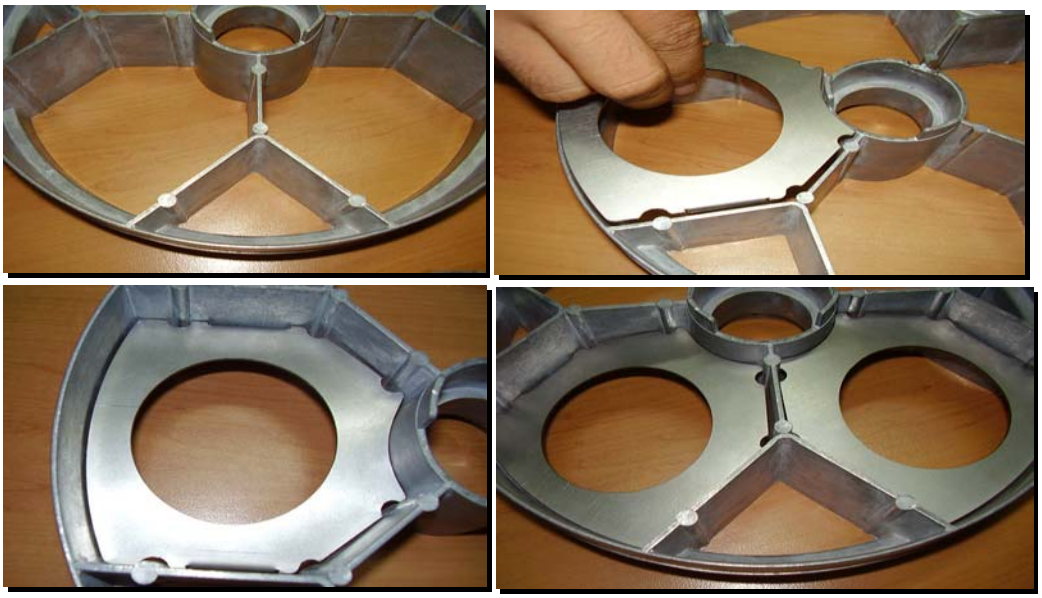

Step 3 Put the Capsule tray back and screw on its original position, now you can use 2” capsule.

PRIZE SELECTION AND PAYOUT ADJUSTMENT

Please read the following guide as a good starting point for setting up of your new ***"Stacker Giant"*** game. By testing different merchandise and fine-tuning the settings you can maximize your game earnings.

*** NOTE! ***
All the following recommendations are based on an approximate payout of **30%.** This payout is recommended for maximum earnings. **30%** payout means that approximately 30% of the game income will be paid out in prizes. **E.g. For every $100 in the cashbox, $30 worth of prizes should be won.**

The recommended game operation for maximum earnings, are as follows:

MAJOR WINS – Approximately '1' win every '400' games played.

MAJOR PRIZE VALUE – Approximately 200 times the price per play.

MAJOR PRIZES – Use good quality "*IN DEMAND*" Prizes
Use different types of prizes on each of the Prize Arms to determine which prizes are most desired by the players. You can then use the game audits to check popularity and vary the stock accordingly. Varying the prize stock will also keep players interest in the game.

MINOR WINS – Approximately '1' win every '1 – 2' games played.

MINOR PRIZE VALUE – Approximately cost should be 20% of the price per play.

MINOR PRIZES – Stacker Giant uses a Capsule Dispenser for Minor Prizes.
This is able to dispense any Round or Capsule item of 50mm ~ 77mm (2" ~ 3") in diameter. Items like rubber balls, Capsules with small items like rings, jewelry and transfer stickers are ideal. Most Gumball Machine suppliers have bulk pre packaged boxes of prize items available as well as empty capsules that you can load yourself.

PRIZE PAYOUT QUICK REFERENCE TABLE

PRICE PER PLAY	**$1.00**	**$2.00**	**$3.00**	**$5.00**
MINOR PRIZE VALUE	20¢ ~ 30¢	40¢ ~ 60¢	80¢ ~ $1.00	$1.40 ~ $1.60
Approximate number of Games per Minor Win	1 – 2	1 – 2	1 – 2	1 – 2
Skill Setting Minor Prize (P09)	1	1	1	1
MAJOR PRIZE VALUE	$150.00	$310.00	$600.00	$800.00
Approximate number of Games per Major Win	400	400	400	400
Skill Setting Major Prize (P10)	8	8	8	8

Based on an approximate payout of **30%**

OPERATION

The ***"Stacker Giant"*** game has six operational modes: Attract mode, Play mode, Test Mode, Programmable Adjustments Mode, Audits Mode and Game History Mode.

OPERATIONAL DIAGRAM

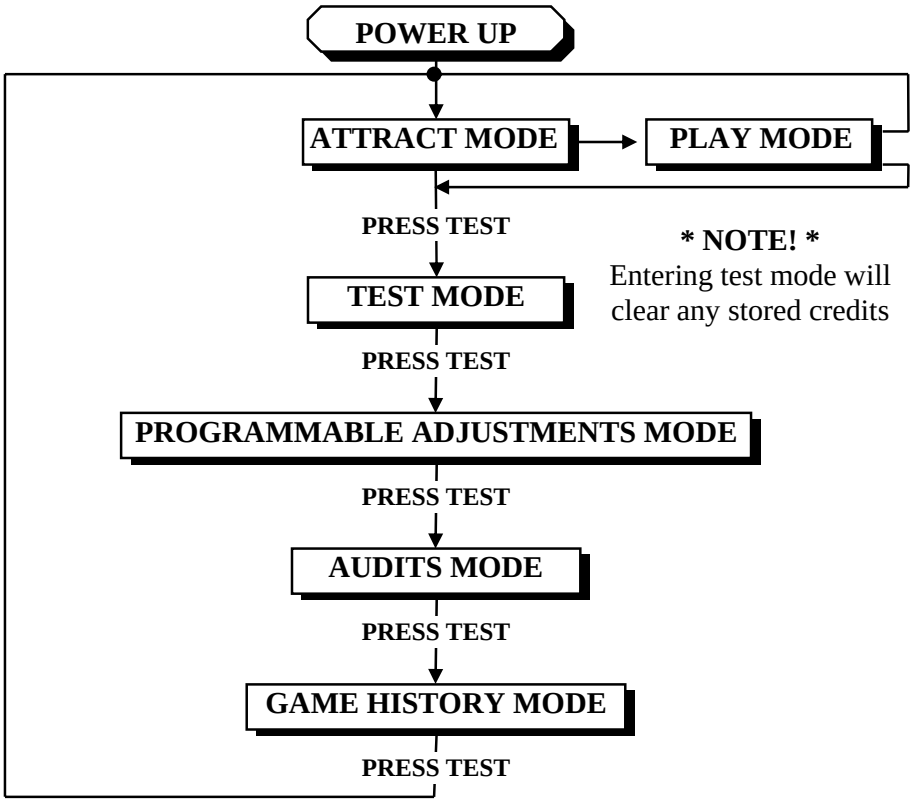

ATTRACT MODE

- The Attract mode provides a light and sound display, while the game is not being played. This feature is to attract potential customers to play the game. The attract mode sound can be turned on and off.
  (Refer to programmable adjustment P07, see page 18 of this manual).

PLAY MODE

- The Stacker Giant has two play modes. The Standard *Coin Play* mode, where a coin, or coins are inserted. Or *Free Play* where no coins are necessary.

COIN PLAY

- The *Coin Play* mode is entered from Attract mode, by inserting coins in any of the two coin slots on the front of the machine cabinet, then following the instructions in the "How to Play" section of this manual.

FREE PLAY

- The free play mode is entered from attract mode by holding the Service button for longer than five second, F r r E will be displayed on the 4-digit LED display.
- For a single free game, just press the Service button once. When issuing single free games in this manner, Prizes can be won as normal.

TEST MODE

The Stacker Giant Test mode has *Three Test Configurations* allowing you to test the function of the Sound, all Game Lamps, Displays, the Game Switches, the Prize Arm Motors, and the capsule dispenser motor. *(Refer to the Test Mode Diagram below).*

The Test mode is also used for Clearing Game Errors. If there is an active error, its code will be displayed. To try to clear the error code, press the red test button once. The error can be bypass by quickly pressing the red test button twice. *(For Game Errors codes, refer to page 36).*

*** NOTE! ***

- Entering Test Mode will CLEAR any CREDITS remaining in the game.
- If during test mode no ADJUSTMENTS or actions are made to the game for approximately four minutes, it will automatically RETURN to Attract Mode.

TEST MODE DIAGRAM

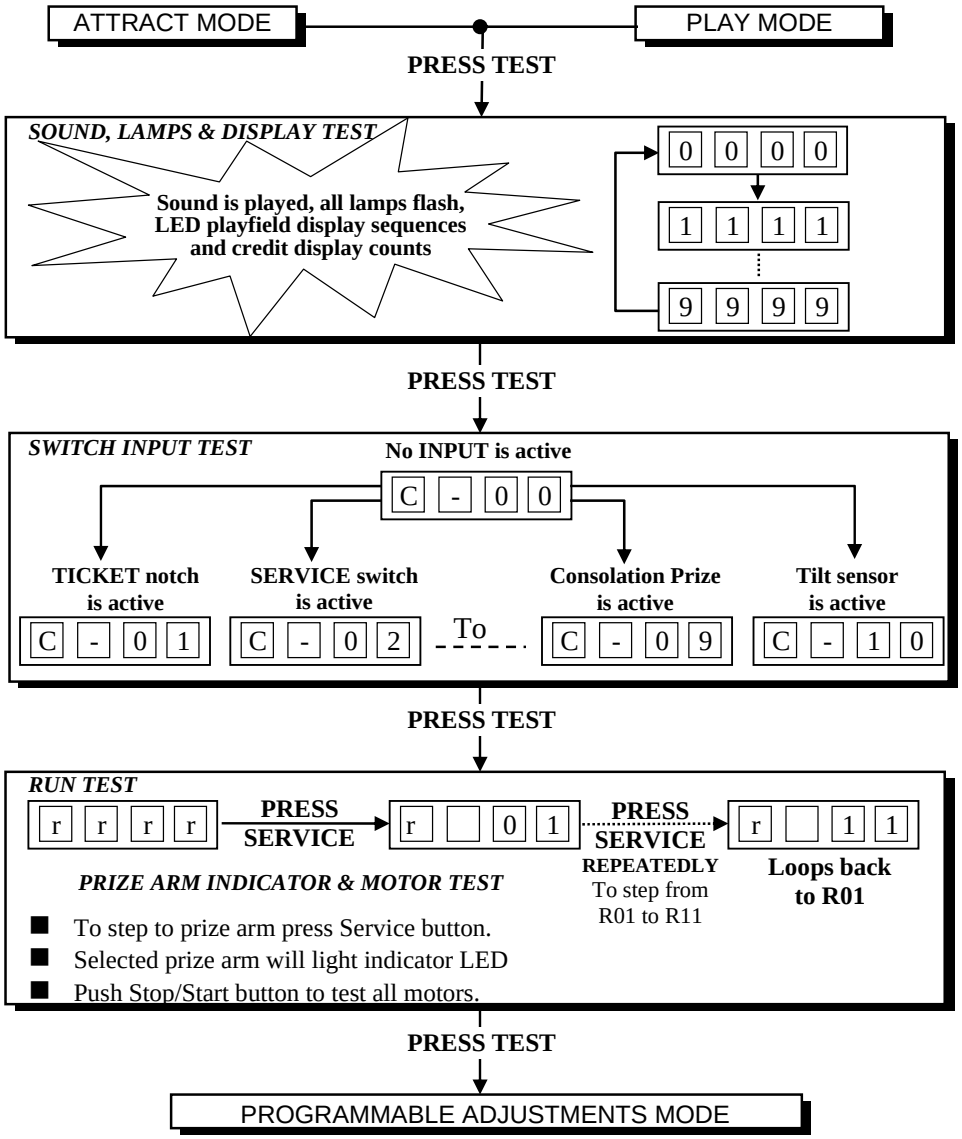

SOUND, LAMPS & DISPLAY TEST

- **ENTER** The Sound, Lamp & Display test is entered from Attract mode by pressing the test button once.

*** NOTE! ***

- If there is an active error displayed, press the red test button once to try and clear the error.
- If the error code will not clear, it can be bypass by quickly pressing the red test button twice.

DURING THE TEST:

- Game music and a voice over will be played.
- The Prize Arm Indicator LEDs will light up in sequence.
- The Credit display will count from 0000 to 9999 and then repeat.
- The LED Playfield Display panel will run a test pattern sequence.
- The Continue, Start/Stop and Select button lamps will flash on and off

- **EXIT** The Sound, Lamp & Display test is exited by pressing the test button. The next test will be switch test.

SWITCH TEST

- **ENTER** The Switch Test can be entered by pressing the Test button once while in the Sound, Light & display test or by pressing the Test button twice while in Attract mode, C-XX will be displayed on the 4-digit display where 'XX' is a number representing the switch that is active.

- **TESTING THE GAME SWITCHES**

  All game switches have a code from C1 to C10 as tabled below. By activating any of the switches, their code will be displayed on the 4-digit display. If no switches are active then C-00 will be displayed.

CODE	DISPLAY	SWITCH FUNCTION	SWITCH LOCATION
C0	C-00	No Switch Active	-
C1	C-01	Capsule Notch Active	Capsule Dispenser
C2	C-02	Service Switch Active	Service Panel
C3	C-03	Start/Stop Button Active	Control Panel
C4	C-04	Coin 1 Switch Active	Coin Door
C5	C-05	Coin 2 Switch Active	Coin Door
C6	C-06	Select Button Active	Control Panel
C7	C-07	Prize Sensor Active	Prize Box
C8	C-08	Continue Button Active	Control Panel
C9	C-09	Minor Prize Button Active	Not Used
C10	C-10	Tilt Switch Active	Not Used

Normal condition for the game is C-00, no switches are active.

*** NOTE! ***

- Several switches can be simultaneously activated in Switch test. The display will then consecutively show their codes, indicating which switches are active. However, it is much easier to test the game switches individually.

RUN TEST

- **ENTER** The Run Test can be entered by pressing the Test button once while in the Switch Test or by pressing the Test button three times while in Attract mode, r r r r will be displayed on the 4-digit display.
- **SELECT** The Service button is pressed once to start the run test mode. The credit display will indicate r - 0 1, the first Major Prize Arm, and also flashing the indicator LED. The Service button is then pressed again to step through each prize arm, flashing the indicator LED of the current prize arm. The last run test, r - 1 1, is the capsule dispenser motor test.
- **RUN** The Start/Stop Button will activate motor of the current selected prize arm or capsule dispenser motor as long as the button is held.
- **EXIT** The Run Test is exited into Programmable Adjustments Mode by pressing the Test Button once.

CODE	DISPLAY	FUNCTION
R01	r - 0 1	Prize arm 1 selected
R02	r - 0 2	Prize arm 2 selected
R03	r - 0 3	Prize arm 3 selected
R04	r - 0 4	Prize arm 4 selected
R05	r - 0 5	Prize arm 5 selected
R06	r - 0 6	Prize arm 6 selected
R07	r - 0 7	Prize arm 7 selected
R08	r - 0 8	Prize arm 8 selected
R09	r - 0 9	Prize arm 9 selected
R10	r - 1 0	Prize arm 10 selected
R11	r - 1 1	Capsule Dispenser selected

PRIZE ARM LOCATION DIAGRAM

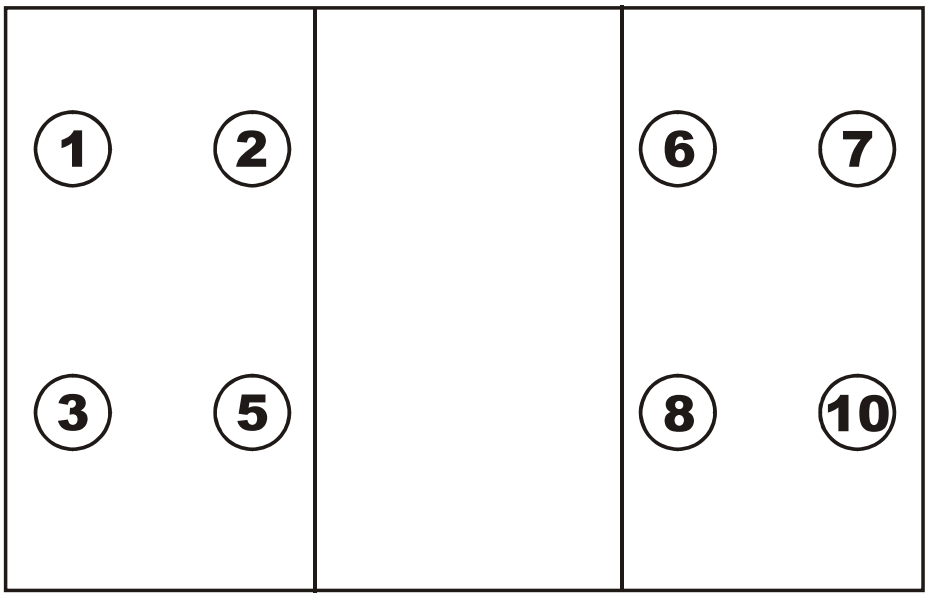

PROGRAMMABLE ADJUSTMENTS MODE

The Stacker Giant has twenty eight programmable adjustments that can be changed in this mode. They are P01 to P28 and their codes and values are displayed alternatively during the adjustment procedure.

Example: Code **P01** *(Number of Coins Mech 1)* is displayed as P□01 and its value of **1** as □□□1 on the 4-digit display.

PROGRAMMABLE ADJUSTMENTS MODE DIAGRAM

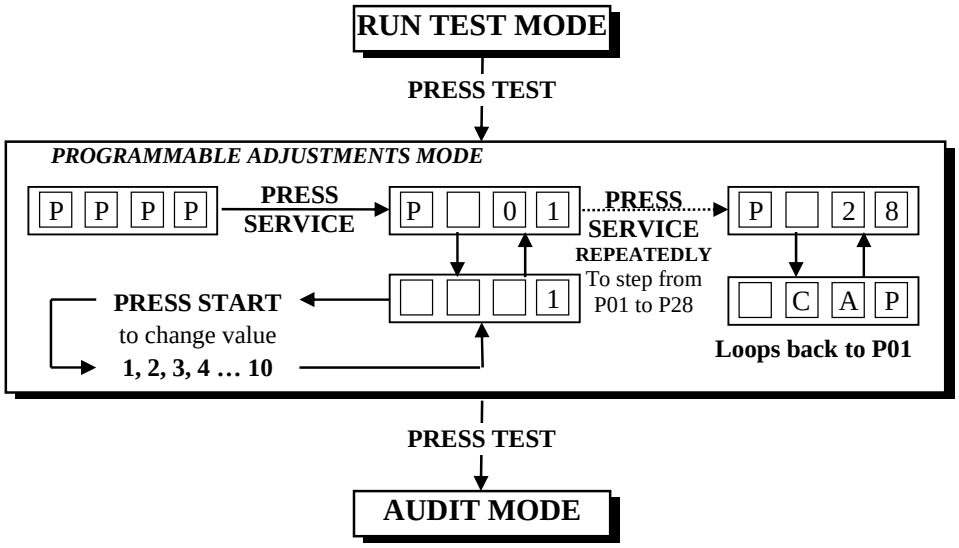

PROGRAMMABLE ADJUSTMENTS PROCEDURE

- **ENTER** The Programmable Adjustments Mode can be entered by pressing the Test button once while in the Run Test or by pressing the Test button four times while in Attract mode, PPPP will be displayed on the 4-digit credit display.

- **SELECT** The green Service button is pressed to step through each of the adjustment configurations, starting from the PPPP display, P01 being the first step, continuing through to P28, and then looping again from P01 to P28 until the mode is exited.

- **CHANGE** The Start/Stop button is pressed to change the displayed value. The value can only be stepped up by using the Start button, but the value will loop back to its minimum value the next step after its max value.

*** NOTE! ***

- Certain program adjustments have a fast adjustment feature. By holding the Start/Stop button down, the values step through quicker.

- **EXIT** The Programmable Adjustments mode is exited into Audits mode, by pressing the Test button once.

PROGRAMMABLE ADJUSTMENTS QUICK REFERENCE TABLE

CODE	PROGRAMMABLE ADJUSTMENTS	OPTIONAL VALUES	DEFAULT SETTINGS	FEATURES
P01	1 – 10	1, 2, 3…10	1	Coin Slot 1 – Coins / Credit
P02	1 – 10	1, 2, 3…10	1	Coin Slot 1 – Games / Credit
P03	ON - OFF	ON - OFF	OFF	Multiple credit bonus for coin slot 1
P03-1	OFF – 99	OFF,1,2,3,4…99	OFF	Coin slot 1 Bonus credit every **X** coin on level 1
P03-2	OFF – 99	OFF,1,2,3,4….99	OFF	Coin Slot 1 Every coin **X** bonus credit on level 1
P03-3	OFF – 99	OFF,1,2,3,4….99	OFF	Coin slot 1 Bonus credit every **X** coin on level 2
P03-4	OFF – 99	OFF,1,2,3,4….99	OFF	Coin Slot 1 Every coin **X** bonus credit on level 2
P03-5	OFF – 99	OFF,1,2,3,4….99	OFF	Coin slot 1 Bonus credit every **X** coin on level 3
P03-6	OFF – 99	OFF,1,2,3,4….99	OFF	Coin Slot 1 Every coin **X** bonus credit on level 3
P04	1 – 10	1, 2,3 …10	1	Coin Slot 2 – Coins / Credit
P05	1 – 10	1, 2,3 …10	1	Coin Slot 2 – Games / Credit
P06	ON – OFF	ON - OFF	OFF	Multiple credit bonus for coin slot 2
P06-1	OFF – 99	OFF,1,2,3,4…99	OFF	Coin slot 2 Bonus credit every **X** coin on level 1
P06-2	OFF – 99	OFF,1,2,3,4….99	OFF	Coin Slot 2 Every coin **X** bonus credit on level 1
P06-3	OFF – 99	OFF,1,2,3,4….99	OFF	Coin slot 2 Bonus credit every **X** coin on level 2
P06-4	OFF – 99	OFF,1,2,3,4….99	OFF	Coin Slot 2 Every coin **X** bonus credit on level 2
P06-5	OFF – 99	OFF,1,2,3,4….99	OFF	Coin slot 2 Bonus credit every **X** coin on level 3
P06-6	OFF – 99	OFF,1,2,3,4….99	OFF	Coin Slot 2 Every coin **X** bonus credit on level 3
P07	ON or OFF	ON or OFF	ON	Attract sound
P08	1 – 6	1, 2, 3 …6	3	Cube Speed
P09	1 – 4	1, 2, 3…4	1	Skill Setting (Minor Prize)
P09 - Skill Setting (Minor Prize) 1 = Approx. 1 Minor Prize in Every Game 2 = Approx. 1 Minor Prize in 2 Games 3 = Approx. 1 Minor Prize in 3 Games 4 = Approx. 1 Minor Prize in 4 Games				
P10	1 – 10	1, 2, 3…10	8	Skill Setting (Major Prize)
P10 - Skill Setting (Major Prize) 1 = Easiest **(Approx. 1 Win in 20 Games)** 2 = Very Easy **(Approx. 1 Win in 30 Games)** 3 = Easy **(Approx. 1 Win in 40 Games)** 4 = Easy to Medium **(Approx. 1 Win in 50 Games)** 5 = Medium **(Approx. 1 Win in 100 Games)** 6 = Medium to Hard **(Approx. 1 Win in 200 Games)** 7 = Hard **(Approx. 1 Win in 300 Games)** 8 = Very Hard **(Approx. 1 Win in 400 Games)** 9 = Very, Very Hard **(Approx. 1 Win in 600 Games)** 10 = Hardest **(Approx. 1 Win in 800 Games)**				
P11	0 – 2	0, 1, 2	0	Mercy System Mode Adjustment
P12	0 – 20	0, 1, 2, 3…20	0	Number of Mercy Tickets
P13	ON or OFF	ON or OFF	OFF	Prizes in free play
P14	ON or OFF	ON or OFF	ON	Major Prize Arm No.1 Status
P15	ON or OFF	ON or OFF	ON	Major Prize Arm No.2 Status
P16	ON or OFF	ON or OFF	ON	Major Prize Arm No.3 Status
P17	ON or OFF	ON or OFF	OFF	Major Prize Arm No.4 Status
P18	ON or OFF	ON or OFF	ON	Major Prize Arm No.5 Status
P19	ON or OFF	ON or OFF	ON	Major Prize Arm No.6 Status
P20	ON or OFF	ON or OFF	ON	Major prize Arm No.7 Status
P21	ON or OFF	ON or OFF	ON	Major prize Arm No.8 Status
P22	ON or OFF	ON or OFF	OFF	Major prize Arm No.9 Status

P23	ON or OFF	ON or OFF	ON	Major prize Arm No.10 Status
P24	1 – 6	1, 2, 3 …6	2	Number of prize arm re-tries
P25	SOFt or HArd	SOFt or Hard	SOFt	Error type for Minor Prize – Err7
P26	ON or OFF	ON or OFF	ON	Attract Animation (strobing) display
P27	0 – 100	0, 1, 2, 3,…100	1	Number of Minor Prize
P28	tic or CAP	tic or CAP	CAP	Minor Prize System
P29	1 – 4	1,2,3,4	2	Error Message Option

PROGRAMMABLE ADJUSTMENTS DETAILED

■ P01 = COIN MECH 1: NUMBER OF COINS PER CREDIT

(Default 01) (Adjustable 1 – 10)

This variable sets the number of coins that need to be inserted into coin mechanism 1, for each credit. It can be set to either of 1, 2, 3… to 10 coins for one credit.

■ P02 = COIN MECH 1: NUMBER of PLAYS PER CREDIT

(Default 01) (Adjustable 1 – 10)

This sets the number of games for each credit inserted into coin mechanism 1. It can be set to either of 1, 2, 3… to 10 plays for each credit.

■ P03 = COIN MECH 1: MULTIPLE BONUS CREDIT

(Default OFF) (Adjustable ON – OFF)

This variable sets the multiple bonus credit activation by 3 levels on coin mechanism 1. It can be set to ON or OFF. The *default* setting is "OFF" this mean the multiple bonuses is disable, if the setting change to ON the multiple bonus setting will be open the **P03-1** setting and so on.

■ P03 - 1 = COIN MECH 1: NUMBER of COIN per BONUS CREDIT on LEVEL 1

(Default OFF) (Adjustable OFF – 99)

This variable sets the number of coins that need to be inserted into coin mechanism 1 for bonus credit. It can be set to either OFF, 1, 2… to 99 coins for bonus credit, (OFF=No bonus), the *default* setting is "OFF" this mean that the **P03-2** will not open.

Examples	**LEVEL 1**	**LEVEL 2**	**LEVEL 3**
P Setting Adjustment	1 *play* **50 cents** 3 *plays* **$ 1.00** 6 *plays* **$ 2.00** 12 *plays* **$ 4.00**	1 *play* **50 cents** 3 *plays* **$ 1.00** 8 *plays* **$ 2.00** 14 *plays* **$ 4.00**	1 *play* **50 cents** 3 *plays* **$ 1.00** 8 *plays* **$ 2.00** 17 *plays* **$ 4.00**
P01 / P04	2	2	2
P02 / P05	1	1	1
P03 / P06	ON	ON	ON
P3-1 / P6-1	4	4	4
P3-2 / P6-2	1	1	1
P3-3 / P6-3	OFF	5	5
P3-4 / P6-4	OFF	2	2
P3-5 / P6-5	OFF	OFF	6
P3-6 / P6-6	OFF	OFF	4

■ P03 -2 = COIN MECH 1: NUMBER of BONUS CREDIT per COIN on LEVEL 1

(Default OFF) (Adjustable OFF – 99)

This variable sets the number of bonus credit that will be given on every coin inserted in coin mechanism 1 on level 1 multiple bonus for bonus credit. It can be

set to either OFF, 1, 2, 3… to 99 bonuses per coin; the *default* setting is "OFF" this mean that the **P03-3** will not open.

■ P03 – 3= COIN MECH 1: NUMBER of COIN per BONUS CREDIT on LEVEL 2

(Default OFF) (Adjustable OFF – 99)

This variable sets the number of coins that need to be inserted into coin mechanism 1 for bonus credit. It can be set to either OFF, 1, 2… to 99 coins for bonus credit on level 2, but the setting value must be higher than setting value of **P03-1**, the *default* setting is "OFF" this mean that the **P03-4** will not open.

■ P03 -4 = COIN MECH 1: NUMBER of BONUS CREDIT per COIN on LEVEL 2

(Default OFF) (Adjustable OFF – 99)

This variable sets the number of bonus credit that will be given on every coin inserted in coin mechanism 1 on level 2 multiple bonus for bonus credit. It can be set to either OFF, 1, 2, 3… to 99 bonuses per coin but setting value must be higher then setting value of **P03-2**, the *default* setting is "OFF" this mean that the **P03-5** will not open.

■ P03 – 5= COIN MECH 1: NUMBER of COIN per BONUS CREDIT on LEVEL 3

(Default OFF) (Adjustable OFF – 99)

This variable sets the number of coins that need to be inserted into coin mechanism 1 for bonus credit. It can be set to either OFF, 1, 2… to 99 coins for bonus credit on level 3, but the setting value must be higher than setting value of **P03-5**, The *default* setting is "OFF" this mean that the **P03-6** will not open.

■ P03 -6 = COIN MECH 1: NUMBER of BONUS CREDIT per COIN on LEVEL 3

(Default OFF) (Adjustable OFF – 99)

This variable sets the number of bonus credit that will be given on every coin inserted in coin mechanism 1 on level 3 multiple bonus for bonus credit. It can be set to either OFF, 1, 2, 3… to 99 bonuses per coin but setting value must be higher then setting value of **P03-4**, the *default* setting is "OFF".

■ P04 = COIN MECH 2: NUMBER OF COINS PER CREDIT

(Default 01) (Adjustable 1 – 10)

This variable sets the number of coins that need to be inserted into coin mechanism 2 for each credit. It can be set to either of 1, 2, 3… to 10 coins for one credit.

- **P05 = COIN MECH 2: NUMBER of PLAYS PER CREDIT**
  (Default 01) (Adjustable 1 – 10)

  This sets the number of games for each credit inserted into coin mechanism 2. It can be set to either of 1, 2, 3… to 10 plays for each credit.

- **P06 = COIN MECH 2: NUMBER of COINS for BONUS CREDIT**
  (Default ON or OFF) (Adjustable ON – OFF)

  This variable sets the multiple bonus credit activation by 3 levels on coin mechanism 2. It can be set to ON or OFF. The *default* setting is "OFF" this mean the multiple bonuses is disable, if the setting change to ON the multiple bonus setting will be open the P06-1 setting and so on.

- **P06-1 = COIN MECH 2: NUMBER of COIN per BONUS CREDIT on LEVEL 1**
  (Default OFF) (Adjustable OFF – 99)

  This variable sets the number of coins that need to be inserted into coin mechanism 2 for bonus credit. It can be set to either OFF, 1, 2… to 99 coins for bonus credit; the *default* setting is "OFF" this mean that the **P06-2** will not open.

- **P06 -2 = COIN MECH 2: NUMBER of BONUS CREDIT per COIN on LEVEL 1**
  (Default OFF) (Adjustable OFF – 99)

  This variable sets the number of bonus credit that will be given on every coin inserted in coin mechanism 2 on level 1 multiple bonus for bonus credit. It can be set to either OFF, 1, 2, 3… to 99 bonuses per coin; the *default* setting is "OFF" this mean that the **P06-3** will not open.

- **P06-3 = COIN MECH 2: NUMBER of COIN per BONUS CREDIT on LEVEL 2**
  (Default OFF) (Adjustable OFF – 99)

  This variable sets the number of coins that need to be inserted into coin mechanism 2 for bonus credit. It can be set to either OFF, 1, 2… to 99 coins for bonus credit; the *default* setting is "OFF" this mean that the **P06-4** will not open.

- **P06 - 4 = COIN MECH 2: NUMBER of BONUS CREDIT per COIN on LEVEL 2**
  (Default OFF) (Adjustable OFF – 99)

  This variable sets the number of bonus credit that will be given on every coin inserted in coin mechanism 2 on level 1 multiple bonus for bonus credit. It can be set to either OFF, 1, 2, 3… to 99 bonuses per coin; the *default* setting is "OFF" this mean that the **P06-5** will not open.

■ P06-5 = COIN MECH 2: NUMBER of COIN per BONUS CREDIT on LEVEL 2

(Default OFF) (Adjustable OFF – 99)

This variable sets the number of coins that need to be inserted into coin mechanism 2 for bonus credit. It can be set to either OFF, 1, 2… to 99 coins for bonus credit; the *default* setting is "OFF" this mean that the **P06-6** will not open.

■ P06 - 6 = COIN MECH 2: NUMBER of BONUS CREDIT per COIN on LEVEL 2

(Default OFF) (Adjustable OFF – 99)

This variable sets the number of bonus credit that will be given on every coin inserted in coin mechanism 2 on level 1 multiple bonus for bonus credit. It can be set to either OFF, 1, 2, 3… to 99 bonuses per coin; the *default* setting is "OFF".

P Setting Adjustment	1 *play* **50 cents** 3 *plays* **$ 1.00** 6 *plays* **$ 2.00** 12 *plays* **$ 4.00**	1 *play* **50 cents** 3 *plays* **$ 1.00** 8 *plays* **$ 2.00** 14 *plays* **$ 4.00**	1 *play* **50 cents** 3 *plays* **$ 1.00** 8 *plays* **$ 2.00** 17 *plays* **$ 4.00**
P01 / P04	2	2	2
P02 / P05	1	1	1
P03 / P06	ON	ON	ON
P3-1 / P6-1	4	4	4
P3-2 / P6-2	1	1	1
P3-3 / P6-3	OFF	5	5
P3-4 / P6-4	OFF	2	2
P3-5 / P6-5	OFF	OFF	6
P3-6 / P6-6	OFF	OFF	4

■ P07 = ATTRACT MODE SOUND

(Default ON) (Adjustable ON or OFF)

This adjustment turns the *attract mode sound* **ON** or **OFF**. This is the sound and music that the game generates to attract customers when it is not being played. The music will cycle approximately every 3 minutes.

■ P08 = CUBE SPEED

(Default 3) (Adjustable 1 - 6)

This option is for setting the *Cube Speed.* This affects the speed of the cube block movement as the player increases in levels. A setting of [1] is the easiest up to [6], the hardest.

■ P09 = SKILL SETTING (Minor Prize)

(Default 1) (Adjustable 1 – 4)

This option sets the *Skill level* for players to reach the Minor Prize level, as listed in the table below. These settings are made easy on purpose, players must still be skillful to get to this level, however very few players take the minor prize, most play on to try and win the major prize.

MINOR PRIZE SKILL SETTINGS	
1 = Approx. 1 Minor Prize in Every Game	**3 = Approx. 1 Minor Prize in 3 Games**
2 = Approx. 1 Minor Prize in 2 Games	**4 = Approx. 1 Minor Prize in 4 Games**

■ P10 = SKILL SETTING (Major Prize)

(Default 8) (Adjustable 1 – 10)

This option sets the ***Skill level*** for players to reach the Major Prize level, as listed in the table below. As this is a skill game the win rate is only the approximate rate for each difficulty setting.

MAJOR PRIZE SKILL SETTINGS			
1 = Easiest	**(Approx. 1 Win in 20 Games)**	**6 = Medium to Hard**	**(Approx. 1 Win in 200 Games)**
2 = Very Easy	**(Approx. 1 Win in 30 Games)**	**7 = Hard**	**(Approx. 1 Win in 300 Games)**
3 = Easy	**(Approx. 1 Win in 40 Games)**	**8 = Very Hard**	**(Approx. 1 Win in 400 Games)**
4 = Easy to Medium	**(Approx. 1 Win in 50 Games)**	**9 =Very, Very Hard**	**(Approx. 1 Win in 600 Games)**
5 = Medium	**(Approx. 1 Win in 100 Games)**	**10 = Hardest**	**(Approx. 1 Win in 800 Games)**

■ P11 = MERCY SYSTEM MODE ADJUSTMENT

(Default 0) (Adjustable 0 – 2)

This option adjusts the way that mercy tickets or capsules paid out if the optional ticket or capsule dispenser is fitted. See **P12** for setting the number of mercy tickets or capsules that will be dispensed.

0 = Mercy System disabled, no ticket or capsules will be paid. This setting must be used if optional ticket or capsule dispenser is not fitted.
1 = Mercy tickets / capsules are paid after the game ends if no Jackpot or Consolation prize is won.
2 = Mercy tickets / capsules are paid on every game credit before the game starts, regardless if prizes are won or not.

*** NOTE! ***

■ Mercy System Mode and Minor Prize System use the same dispenser and can be operated together.

■ If no ticket or capsule dispenser is fitted to the machine, make sure **P11** and **P12** adjustments are set to [0].

■ P12 = NUMBER of MERCY TICKETS / CAPSULES ADJUSTMENT

(default 0) (Adjustable 0 – 20)

This option adjusts *the number of mercy tickets or capsules* paid out if the optional ticket or capsule dispenser is fitted. See **P11** for setting Mercy System Mode payout options.

■ P13 = PRIZES IN FREE PLAY MODE

(Default OFF) (Adjustable ON or OFF)

This setting controls whether or not the *game dispenses prizes* in free play mode. The options are **ON** or **OFF**.

PRIZE ARM STATUS

Prize Arm Status adjustments P14 to P23 are used to disable Prize Arms that have been removed to allow larger prizes to be dispensed. Stacker Giant comes with all prize arms installed as default.

*** NOTE! ***
Disabled Prize Arms are unable to be selected by Winning Players

■ P14 to P23
MAJOR PRIZE ARM No.1 to 10 STATUS

(Default, *see table below*) (Adjustable ON or OFF)

This option is for enabling or disabling of Major Prize Arms numbered 1 through to 10.

Default Table

Prize Arm No.	Default	Prize Arm No.	Default
Major Arm 1	ON	Major Arm 6	ON
Major Arm 2	ON	Major Arm 7	ON
Major Arm 3	ON	Major Arm 8	ON
Major Arm 4	OFF	Major Arm 9	OFF
Major Arm 5	ON	Major Arm 10	ON

PRIZE ARM NUMBER & LOCATION

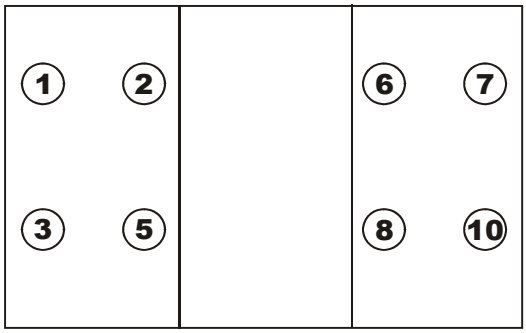

*** NOTE! ***
If all Major Prize Arms are set to **[OFF]**
the error message **[Err6]** will be displayed in the credit display.
See Error Codes on page 30 for more detail.

■ P24 = NUMBER OF PRIZE ARM RE-TRIES

(Default 02) (Adjustable 1 – 6)

This option controls *the number of retries* a user will get when a prize arm times out during the prize selection stage.

*** NOTE! ***
If the machine fails to detect a prize fall after set number of re-tries,
the error message [**Err4 or Err7**] will be displayed in the credit display.
See Error Codes on page 30 for more detail.

■ P25 = ERROR TYPE FOR MINOR PRIZE – ERR7

(Default Soft) (Adjustable Soft or Hard)

This variable sets the type of action taken when there is a Minor Prize deployment error **[Err7]**. When set to Soft **[SOFt]** on an error 7 the game will automatically continue to play on for a Major Prize. If set to Hard **[HArd]** the game will stop and display **Err7** in the Credit Display and sound "Please Call the Attendant"

*** NOTE! ***
For more information on [**Err7**] please see Error Codes on page 30.

■ P26 = ATTRACT ANIMATION (STROBING) DISPLAY

(Default ON) (Adjustable ON or OFF)

This setting controls whether or not the game displays the strobing of the attract animation. When set to ON, the game will display the attract animation with strobing. If set to OFF, the game will skip the strobing part of the attract animation.

■ P27 = NUMBER OF MINOR PRIZE

(Default 1) (Adjustable 0 – 100)

This setting controls *the number of minor prize* (capsules/tickets) dispensed when player chooses to take the minor prize win. Choosing to continue to play on for the major prize will abandon the minor prize win and player will get nothing if he/she fails to win the major prize.

*** NOTE! ***
Setting **P27** to **0** will disable any minor prize payout and the game will continue to play on for major prize.

■ P28 = MINOR PRIZE SYSTEM

(Default CAP) (Adjustable tic or CAP)

This adjustment sets the payment system of minor prize. Tic is for ticket, while CAP is for capsule as the payment of minor prize.

■ P29 = Error Message Option

(Default 2) (Adjustable 1 - 4)

This adjustment sets the way error messages are handled. The game can play a voice over error, or display the error on the small 4 digit display.

Setting	Voice Over	4 Digit Display
1	Played	Displayed
2	Played	Error will display when test button press and the next test button will try clear the error
3	Not Played	Displayed
4	Not Played	Error will display when test button press and the next test button will try clear the error

*** NOTE! ***
Before setting this adjustment, make sure which payment system is going to be used and that the dispenser has been properly installed on the machine.

AUDITS MODE

The Audits Mode allows the operator to view statistics in all areas of the Game Play. This enables the operator to make calculated adjustments and "Fine Tune" the machine to maximize earning potential. The Audits mode stores bookkeeping of the games processed since the last game audits reset. While in this mode, the game audits can also be reset to zero.

The Stacker Giant has thirty six Audits that can be viewed in this mode. They are A01 to A36 and their codes and values are displayed alternatively during the Audit Mode.

Example: Code **A01** will be displayed as A 0 1 and a value of **421** as 4 2 1 on the 4-digit display.
Or it will display large values like **21589** as - - - 2 and 1 5 8 9 on the 4-digit display.

AUDITS MODE DIAGRAM

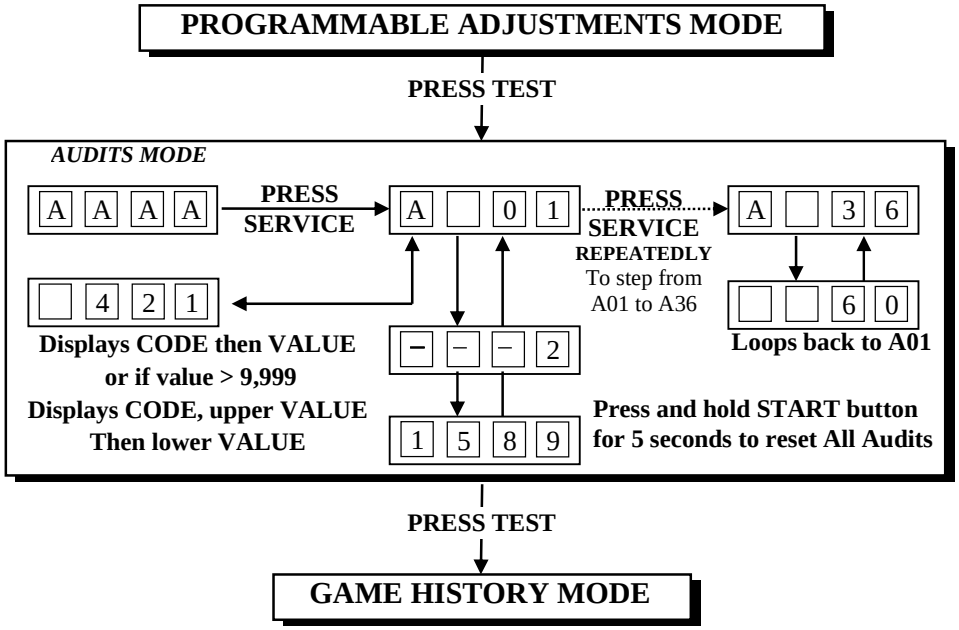

*** NOTE! ***

- For Audit values that are greater than 9,999 the audits' values will be displayed in two steps.
- The first number, which is displayed as - - - 2, has leading dash symbols
  (-). The number displayed here must by multiplied by 10,000 and added to the second value.
- The second value is displayed as 1 5 8 9, which has no dash symbols.
- In this example the final value is 21,589 {(2x10,000) + (1589)}.

AUDIT PROCEDURE

- **ENTER** The Audits mode is entered from Programmable Adjustments mode by pressing the Test button once or from Attract mode by pressing the Test button five times. A A A A will be displayed on the 4-digit display.

- **SELECT** The green Service button is pressed for advancing each step through the set of audits configurations, starting from the A A A A display, A01 being the first step, continuing through to A36, and then looping again from A01 to A36 until the mode is exited.

- **RESET** The entire set of user audits can be reset during any of the audit configurations, by holding the Start button for longer than 5 seconds. The displays will be cleared while still holding the button pressed and will return to the same audit step after releasing the button. The value of all audits will be reset to "00 000".

- **EXIT** The Audits mode is exited into Game History mode, by pressing the Test button once.

*** NOTE! ***

- **ALL** Audits will **STOP INCREMENTING** when the "Total Number of Games Played", audit A-07, reaches 60,000.

- To restart the audits they must be reset to 00 000 by holding The Start button for longer than 5 seconds while in audits mode.

AUDITS QUICK REFERENCE TABLE

CODE	DISPLAY	AUDIT FUNCTION
A01	A-01	Total Coins In Mechanism 1
A02	A-02	Total Coins In Mechanism 2
A03	A-03	Total Number of Service Credits
A04	A-04	Total Number of Major Prize Wins
A05	A-05	Total Number of Minor Prize Wins
A06	A-06	Total Number of Skip Minor for Major Prize attempt
A07	A-07	Total Number of Games Played
A08	A-08	Total number Games ending at level 1
A09	A-09	Total number Games ending at level 2
A10	A-10	Total number Games ending at level 3
A11	A-11	Total number Games ending at level 4
A12	A-12	Total number Games ending at level 5
A13	A-13	Total number Games ending at level 6
A14	A-14	Total number Games ending at level 7
A15	A-15	Total number Games ending at level 8
A16	A-16	Total number Games ending at level 9
A17	A-17	Total number Games ending at level 10
A18	A-18	Total number Games ending at level 11
A19	A-19	Total number Games ending at level 12
A20	A-20	Total number Games ending at level 13
A21	A-21	Total number Games ending at level 14
A22	A-22	Total number Games ending at level 15
A23	A-23	No. of prize selections on Major Prize Arm No.1
A24	A-24	No. of prize selections on Major Prize Arm No.2
A25	A-25	No. of prize selections on Major Prize Arm No.3
A26	A-26	No. of prize selections on Major Prize Arm No.4
A27	A-27	No. of prize selections on Major Prize Arm No 5
A28	A-28	No. of prize selections on Major Prize Arm No.6
A29	A-29	No. of prize selections on Major Prize Arm No.7
A30	A-30	No. of prize selections on Major Prize Arm No.8
A31	A-31	No. of prize selections on Major Prize Arm No.9
A32	A-32	No. of prize selections on Major Prize Arm No.10
A33	A-33	Manufactures Audit only
A34	A-34	Manufactures Audit only
A35	A-35	Manufactures Audit only
A36	A-36	Manufactures Audit only

AUDITS DETAILED

■ A01 = TOTAL COINS IN MECHANISM 1

This Audit displays the *total number of coins* inserted into coin mechanism 1 since the audits were last cleared.

■ A02 = TOTAL COINS IN MECHANISM 2

This Audit displays the *total number of coins* inserted into coin mechanism 2 since the audits were last cleared.

■ A03 = TOTAL NUMBER OF SERVICE CREDITS

This Audit displays the *total number of Service Credits* since the audits were last cleared. This records the number of credits given by pressing the Service Button on the service panel.

■ A04 = TOTAL NUMBER OF MAJOR PRIZE WINS

This Audit displays the *total number of Major Prize Wins* since the audits were last cleared.

■ A05 = TOTAL NUMBER OF MINOR PRIZE WINS

This Audit displays the *total number of Minor Prize Wins* since the audits were last cleared.

■ A06 = TOTAL NUMBER OF SKIP MINOR FOR MAJOR PRIZE ATTEMPT

This Audit displays the *total number of* times the *Minor Prize Win* was skipped for an attempt at a *Major Prize Win,* since the audits were last cleared.

■ A07 = TOTAL GAMES PLAYED

This Audit displays the *total number of Games Played* since the audits were last cleared.

*** NOTE! ***

- **ALL** Audits will **STOP INCREMENTING** when the "Total Number of Games Played", audit A-07, reaches 60,000.
- To restart the audits they must be reset to 00 000 by holding The Start button for longer than 5 seconds while in audits mode.

- **A08 to A19**
  TOTAL NUMBER OF GAMES ENDING on LEVELS 1 to 12

  These Audits display the *total number of games ending on level* number 1 through to 12 on this machine since the audits were last cleared. Each level is a row of squares on the LED Playfield Display; row one starting at the bottom with row fifteen at the top.

- **A20 to A22**
  TOTAL NUMBER OF GAMES ENDING on LEVELS 13 to 15

  These Audits only available in STD game mode. In GNT game mode, these Audits value will stay in the number zero. *(Refer to P27 setting in Programmable settings mode on page 18 for Details).*

- **A23 to A32**
  TOTAL NUMBER OF PRIZE SELECTIONS on PRIZE ARM POSITION NUMBER 1 to 10

  These Audits display the *total number of the prize selections on Prize Arm positions* number 1 through to 10 on this machine since the audits were last cleared.

PRIZE ARM NUMBER & LOCATION

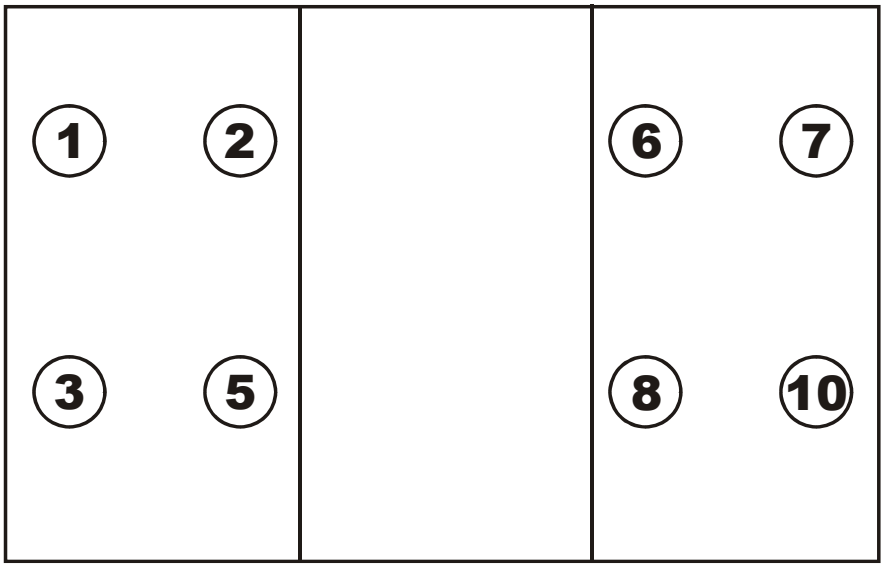

- **A33 to A36 = MANUFACTURE AUDITS ONLY**

  These are Manufacturer Audits only and serve no useful function for the operator of this game.

*** NOTE! ***

- Customer Support may request from the operator the values of these audits.

GAME HISTORY MODE

By using the Game History Mode the operator can view the results of the last 10 games played. This enables the operator to verify player's game results and verify the win / lose pattern on the LED Playfield Display.

Example: The history results for the last Game Played. H01 shows Level 5 was where the game ended and the LED block stack pattern will be shown on the LED Playfield Display.

GAME HISTORY MODE DIAGRAM

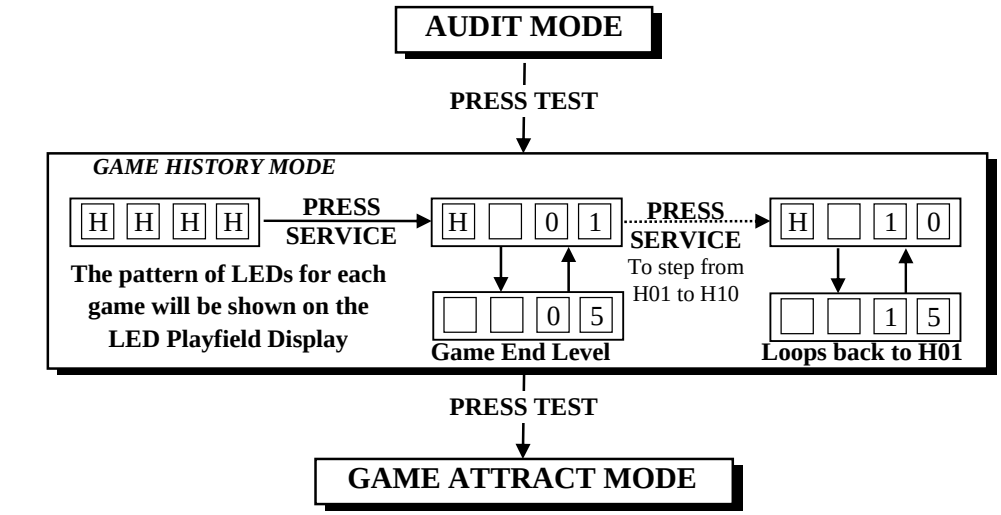

*** NOTE! ***

- H01 and H02 will remain in the memory for operational use even if the game is switched off then on.
- Score Histories will be erased if the game is switched off then on. Empty score histories show as - - - - on the 4-digit display

GAME HISTORY QUICK REFERENCE TABLE

CODE	DISPLAY	HISTORY RESULTS
H01	H - 0 1	Level Ending & LED Pattern for Very Last Game Played
H02	H - 0 2	Level Ending & LED Pattern for 2nd Last Game Played
H03	H - 0 3	Level Ending & LED Pattern for 3rd Last Game Played
H04	H - 0 4	Level Ending & LED Pattern for 4th Last Game Played
H05	H - 0 5	Level Ending & LED Pattern for 5th Last Game Played
H06	H - 0 6	Level Ending & LED Pattern for 6th Last Game Played
H07	H - 0 7	Level Ending & LED Pattern for 7th Last Game Played
H08	H - 0 8	Level Ending & LED Pattern for 8th Last Game Played
H09	H - 0 9	Level Ending & LED Pattern for 9th Last Game Played
H10	H - 1 0	Level Ending & LED Pattern for 10th Last Game Played

GAME HISTORY PROCEDURE

- **ENTER** The Game History mode is entered from Audits mode by pressing the Test button once or from Attract mode by pressing the Test button six times. H H H H will be displayed on the 4-digit display.

- **SELECT** The green Service button is pressed for advancing each step through the set of Game Histories, starting from the H H H H display, H01 being the first step, continuing through to H10, and then looping again from H01 to H10 until the mode is exited.

- **EXIT** The Game History mode is exited into Game Attract mode, by pressing the Test button once.

ERRORS AND TROUBLESHOOTING

If the microprocessor detects any problems with the operation of the game, an Error will be displayed on the 4-digit display and the machine will play a voice message. “Please Call the Attendant”. Some error Messages will only be displayed when test mode is entered. Errors are displayed on the displays as Err X, where ‘X’ is the error number. There are eight error messages for Stacker Giant, listed as follows:

ERROR CODE QUICK REFERENCE TABLE

CODE	ERROR DESCRIPTION	SOLUTION
Err1	MERCY SYSTEM ERROR Jammed tickets/capsules or no ticket/capsule notch pulse for longer than 3 seconds.	■ If the ticket/capsule dispenser is fitted, clear ticket/capsule dispenser jam, replenish tickets/capsules. After this, push Test button once to clear error. ■ If the ticket/capsule dispenser is not fitted, make sure P11 and P12 are set to 0”.
Err2	START/STOP BUTTON JAMMED, active for longer then 30 seconds	Check Button function using switch test
Err3	EEPROM ERROR Problem with on-board EEPROM	The main MCU is getting errors reading the EEPROM (24C16 IC on MCU). Send MCU PCB to the closest LAI Games distributor for repair.
Err4	MAJOR PRIZE DEPLOYMENT ERROR	Refill Major Prize Arms or test sensor using switch test.
Err5	PRIZE SENSOR BLOCKED or PRIZE SENSOR FAULTY	Clear Blockage from between prize sensors or test sensor using switch test.
Err6	All PRIZE ARMS STATUS are DISABLED.	Check that at lest one Major Prize Arm (P14 to P23) has been set active. Prize Arms ON.
Err7	MINOR PRIZE DEPLOYMENT ERROR	Refill Capsule Dispenser, check for capsule jam or do run test.
Err8	PRIZE BOX GATE ERROR	Make sure the prize box gates are closed. Check that there is no jam in the prize box gates.

Error displayed on Machine

TROUBLESHOOTING GAME ERRORS

■ CLEARING GAME ERRORS

Game errors can be cleared, by pushing the test button ONCE. The game will try and check if the error is fixed. If the reason for the error is fixed, the game will continue as normal. If the error is not fixed, the error will remain on the display.

■ Err1 – MERCY SYSTEM ERROR

This error usually occurs if the game has run out of tickets/capsules or there is a ticket/capsule jam when the machine tries to dispense mercy tickets. A less common reason is if the game PCB tries to dispense tickets/capsules but doesn't get a notch pulse for approximately three seconds for tickets or 80 seconds for capsules.

Use the Switch Test and test the notch pulse by manually activating the micro-switch on the ticket/capsule dispenser, an active notch will be display as **C1**, *(See Page 16 for Details)*. Also check that the dispenser setting for minor prize is correct for the dispenser fitted *(See page 22 for P28 setting)*.

If the game was out of tickets/capsules, replace the tickets/capsules, clear the jam and then push the test button once to clear the error. The game will then payout any owed tickets/capsules.

■ Err2 – START/STOP BUTTON JAMMED

This error is usually displayed if the Start/Stop button is active for longer then 30 seconds. Use the Switch Test and check the Stop/Start button, an active button will be displayed as **C3**, *(See Page 16 for Details)*.

■ Err3 – EEPROM ERROR

This Error is only displayed in test mode and means that the CPU cannot read the EEPROM, or is receiving errors during communication with the EEPROM (The 23C16 IC on the main MCU PCB). This could cause problems with the game audits and program settings. If this error occurs, take your game to the nearest authorized LAI games dealer for repair.

■ Err4 – MAJOR PRIZE DEPLOYMENT ERROR

This error is usually displayed if an empty Major prize arm is selected by a Major prize-winner or if the game activates the Major prize arm and does not sense a prize dropping through the prize sensor. The Err4 error code and the Major Prize Arm location numbers are displayed alternatively.

The error can also occur if the Major prize arm **"TIMES OUT"** caused by taking to long to dispense a prize. This can happen if there is more than half a prize arm length between Major prizes on the Major prize arm, the Major prize arm is not turning or the prize sensor is not working.

Test the prize arm function using the Run Test, *(See Page 17 for Details)*. Test the prize sensor using the Switch Test, *(See Page 16 for Details)*. Pass your hand through the infrared beams in the prize chute. Blocking the invisible beams should display **C7** in switch test. Removing your hand from the beams should stop **C7** from being displayed.

■ **Err5 – PRIZE SENSOR BLOCKED or PRIZE SENSOR FAULTY**

This error usually occurs if the prize sensor is blocked or a prize is jammed in the prize chute, blocking the infrared beam of the prize sensor for longer then 5 seconds. This error can also occur if the sensor output pulses or "flickers" due to miss alignment for more then 20 times every 5 seconds.

The sensor can be tested using the switch test, *(See Page 16 for Details)*. If the sensor is blocked **C7** will be displayed in this test. Clear what ever is blocking the sensor and the error will clear itself.

If you cannot find anything blocking the sensor, there could be faulty infrared sensors or receivers on the prize sensor. The sensor PCB's should be returned to your nearest LAI Games distributor for repair.

The Prize Sensor is designed around 12 pairs of infrared detectors and LEDs. Blocking the infrared path of any one of the 12 beams will trigger a common output. There are 6 orange LEDs on each Sensor PCB to help indicate the active pairs of infrared beams.

■ **Err6 – All PRIZE ARMS STATUS are DISABLED.**

This error will only be displayed if programmable adjustments **P14** to **P23** (Major Prize Arm Status) are all set to **OFF** (Disabled).

There should be at least one Major Prize Arm Status set to **ON**. Push the test button once to enter directly to **P14** or **P23** in adjustment mode, locate what prize arms need to be active and set that Prize Arm Status to **ON,** *(See Page 18 for Details)*.

■ **Err7 – MINOR PRIZE DEPLOYMENT ERROR**

This error is usually displayed if no capsules are dispensed after a Minor prize-winner selects a minor prize.

*** NOTE! ***
P25 setting will affect what the action the game will take on an error 7 **[Err7]**.
Please see Program Adjustments on *page 17* for more information.

Test the capsule dispenser using Run Test, *(See Page 17 for Details)*. Use the Switch Test and test the notch pulse by manually activating the micro-switch on the ticket/capsule dispenser, an active notch will be display as **C1**, *(See Page 16 for Details)*. Also check that the dispenser setting for minor prize is correct for the dispenser fitted *(See page 22 for P28 setting)*.

If the game was out of tickets/capsules, replace the tickets/capsules, clear the jam and then push the test button once to clear the error.

■ **Err8– PRIZE BOX GATE ERROR.**

This error can occur if one of the prize box gates is open for more than 5 minutes. Check that there is no jam in the prize box gates and the sensors are working properly.

READING PRIZE BOX SENSOR LED INDICATOR

There are two prize box sensor PCBs that are attached to a prize box of the machine, Master PCB (FB89A) and Slave PCB (FB89B). In the Master PCB, there is a LED Indicator that will lit when the prize box sensor is blocked. This is how to read the LED indicator:

1. In normal condition (prize sensor is not blocked), all LEDs in the LED indicator is OFF. The LED indicator consists of twelve yellow LEDs and each represents a connection of prize sensor between the Master PCB and Slave PCB.
2. When a connection between prize sensors is blocked, then the LED that represents that connection will lit. Example: when the connection between TX1 (in Master PCB) and RX1 (in Slave PCB) is blocked. Then the LED that represents that connection in the LED indicator will lit.

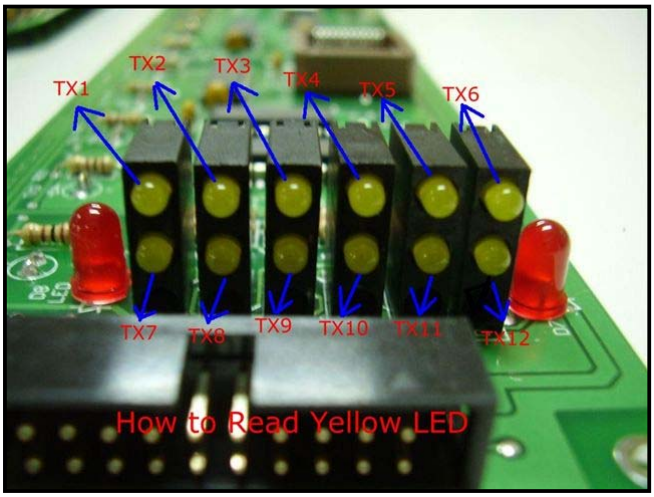

LED Indicator in Master PCB

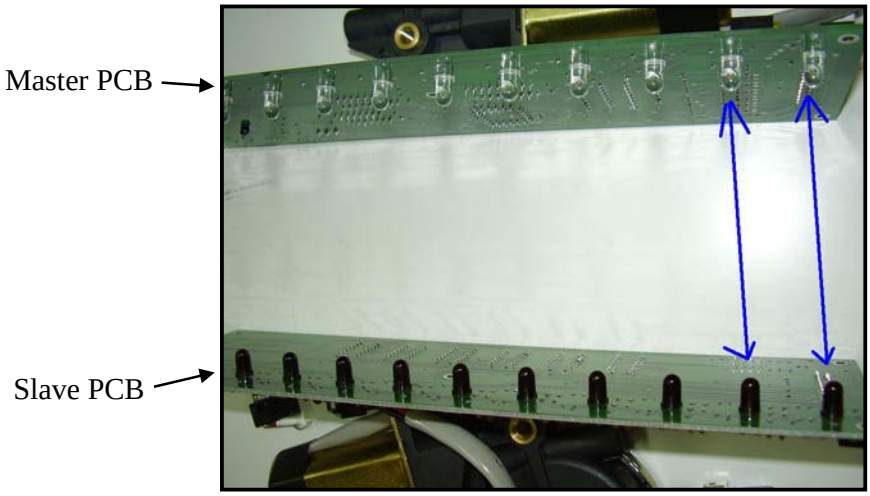

Connection of prize sensor between
Master PCB and Slave PCB

READING LED'S INDICATOR ON BAFB95

BAFB95 PLD MOTOR CONTROL PCB is located inside the machine and is accessed from the back of the machine. On this PCB, there are eight (8) LED Indicators that are used to indicate troubles related to prize box gate, sensors, safety switch, and limit switch.

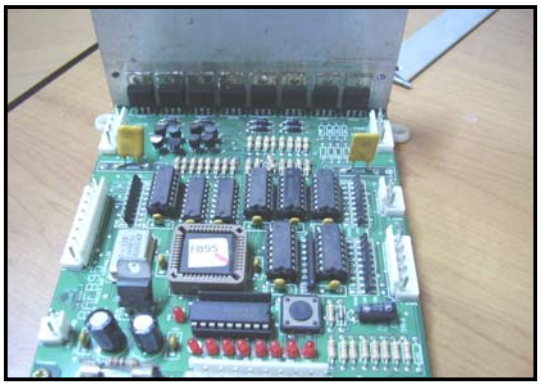

This is the order of the LED:

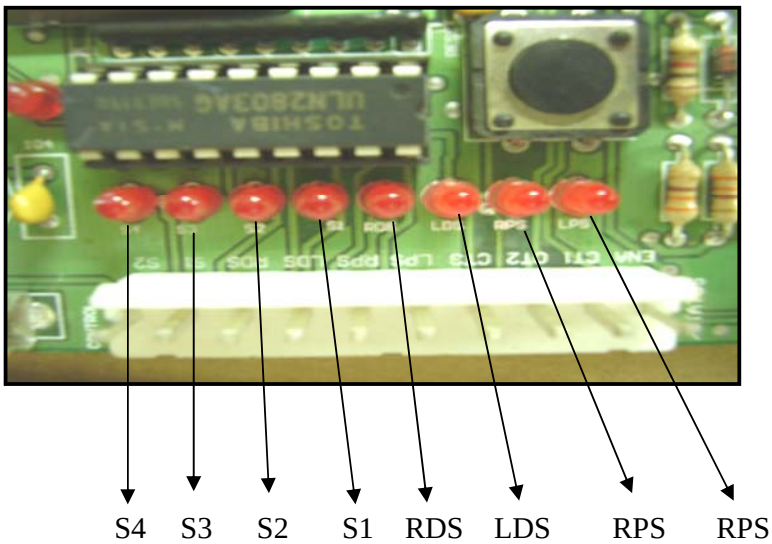

S4 = Right Prize Sensor
S3 = Left Prize Sensor
S2 = Prize Sensor Status
S1 = Prize box status
RDS = Right door safety switch status
LDS = Left door safety switch status
RPS = Right door open/close status
LPS = Left door open/close status.

How to read the Indicator:

1. ○ ○ ○ ○ ○ ○ ● ●
S4 S3 S2 S1 RDS LDS RPS LPS

Indicates: Normal condition (No troubles occurred)

2. ● ○ ● ○ ○ ○ ○ ○
S4 S3 S2 S1 RDS LDS RPS LPS

Indicates: The left prize box gate sensor is active and there is something blocking the sensor.

3. ○ ● ● ○ ○ ○ ○ ○
S4 S3 S2 S1 RDS LDS RPS LPS

Indicates: The right prize box gate sensor is active and there is something blocking the sensor.

4. ○ ○ ○ ● ○ ○ ○ ○
S4 S3 S2 S1 RDS LDS RPS LPS

Indicates: No switches in the left and right prize box gate are active.

5. ○ ○ ○ ○ ● ○ ○ ○
S4 S3 S2 S1 RDS LDS RPS LPS

Indicates: The safety switch of the left prize box gate is active.

6. ○ ○ ○ ○ ○ ● ○ ○
S4 S3 S2 S1 RDS LDS RPS LPS

Indicates : The safety switch of the right prize box gate is active.

The LED Indicators on BAFB95 PCB are useful to indicate any problems concerning prize box gate and to identify the exact problem.

FUSE INFORMATION

*** WARNING! ***
Always *turn* ***OFF*** *Mains power and unplugged the game, before replacing any fuses.*

- **MAIN AC SUPPLY FUSE (1 x 6 AMP FAST BLOW, M205 TYPE)**
  This fuse is for the main AC supply and is situated in the IEC mains input socket.

*** NOTE! ***
- The power cord must be removed before the fuse can be accessed.

- **MCU POWER FUSE (1 x 1.5 AMP FAST BLOW, M205 TYPE)**
  This fuse is for the power supply to the MCU PCB.

- **MCU CONTROL FUSES (2 x 5 AMP FAST BLOW, M205 TYPE)**
  These fuses are for the DC transistor drivers on the MCU PCB.

- **12 LED PLAYFIELD DISPLAY CONTROLLER FUSES**
  (12 x 2.5 AMP FAST BLOW, M205 TYPE)
  This fuse is for the +5VDC on the three LED Playfield Display PCBs.

- **GATE CONTROL POWER FUSE (1 x 1.5 AMP FAST BLOW, M205 TYPE)**
  This fuse is for the power supply to the Gate Control PCB.

- **DOWN LIGHT FUSES (2 x 5 AMP FAST BLOW, 3AG TYPE)**
  This fuse is for the five 12VAC 20W Down Light Lamps.

*** CAUTION! ***
Do Not *use any fuse that does not meet the specified rating.*

FUSE LOCATION DIAGRAM

As viewed from rear (Middle Part)

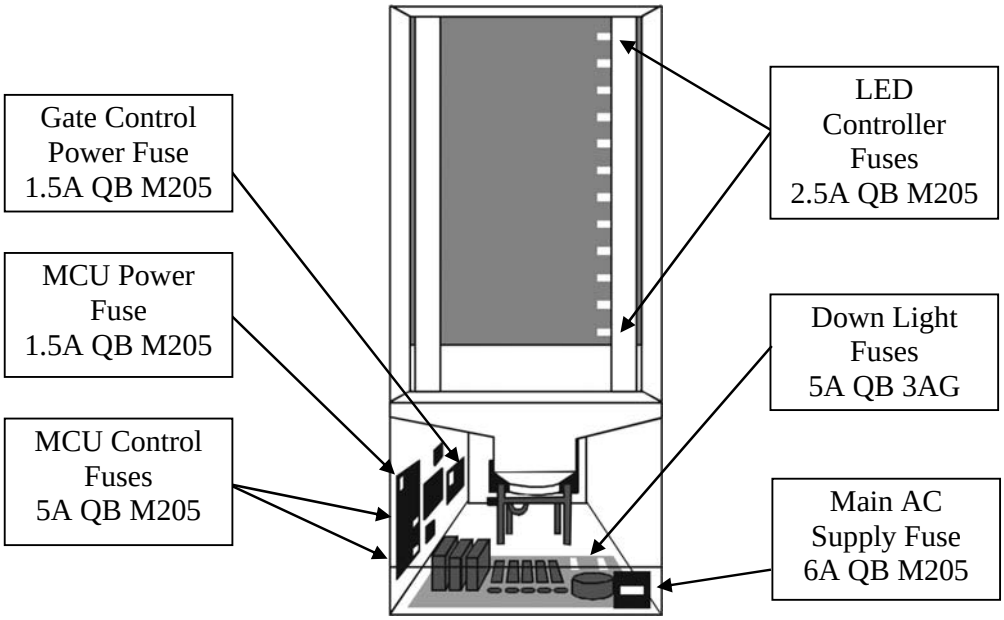

SECTION A: SERVICE INSTRUCTIONS

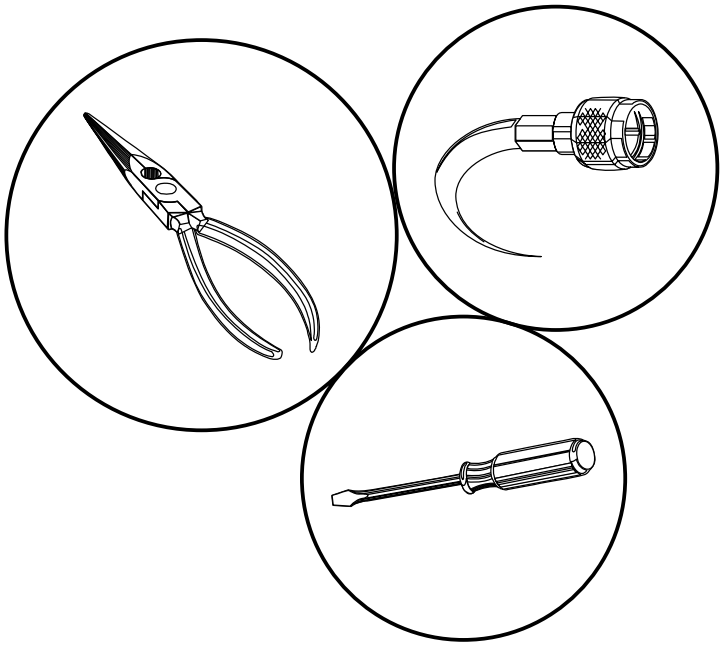

BE SURE TO READ THE FOLLOWING
Carefully before servicing this machine

A

LOCATING AND ACCESSING PARTS

PARTS LOCATION DIAGRAM

As viewed from front

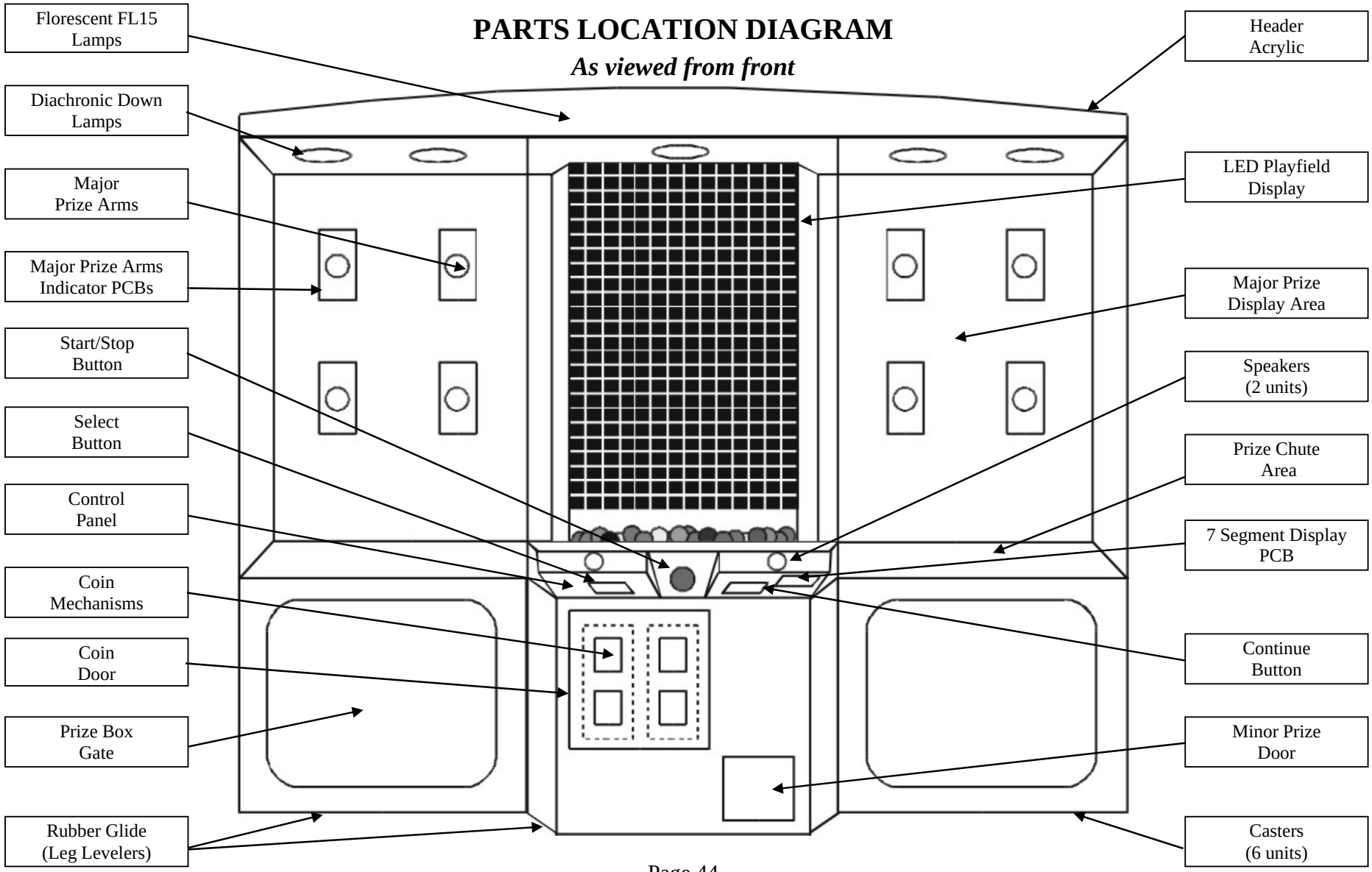

PARTS LOCATION DIAGRAM Cont.

As viewed from rear

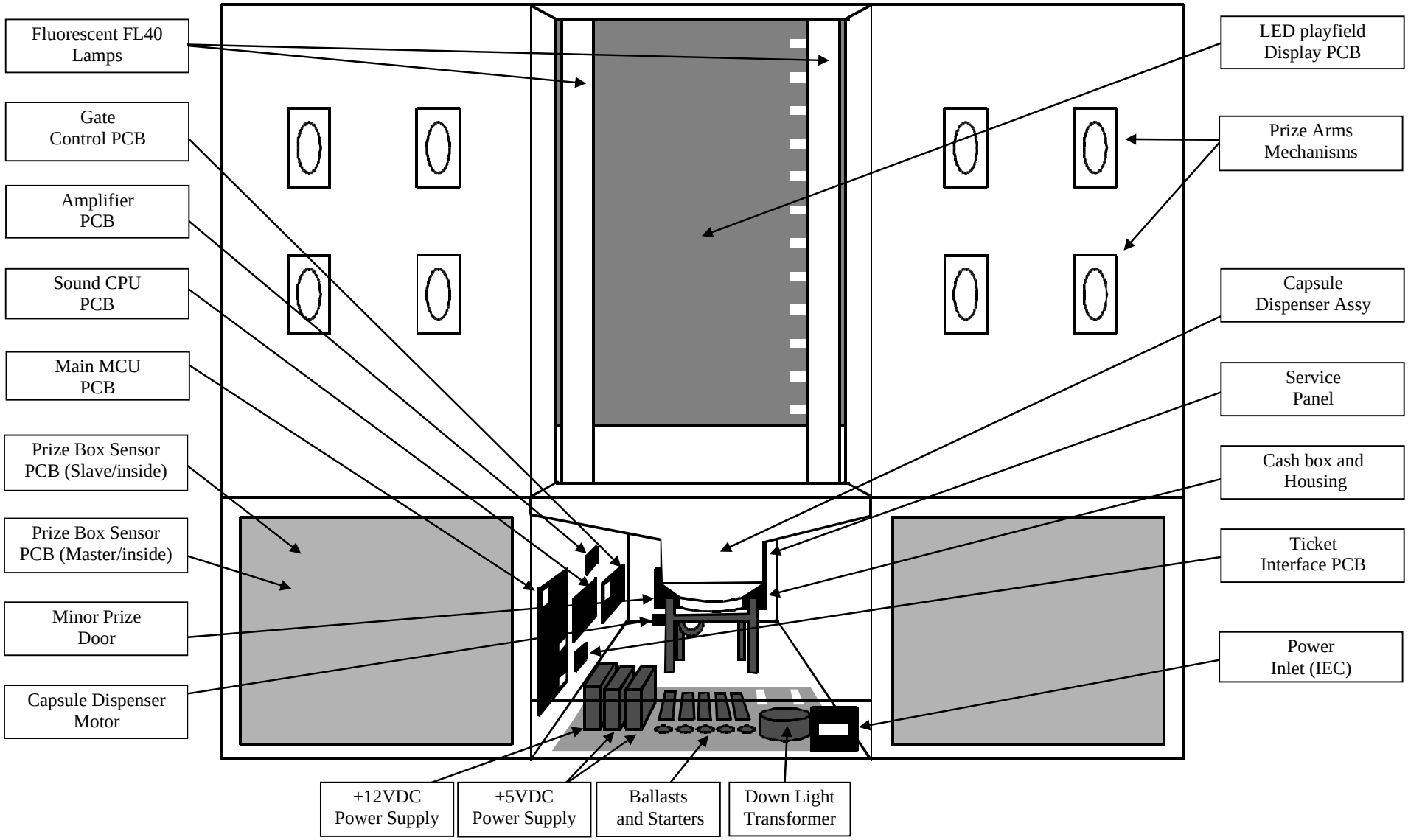

PARTS LOCATION DIAGRAM Cont.

Inside Left Prize Box as viewed from rear

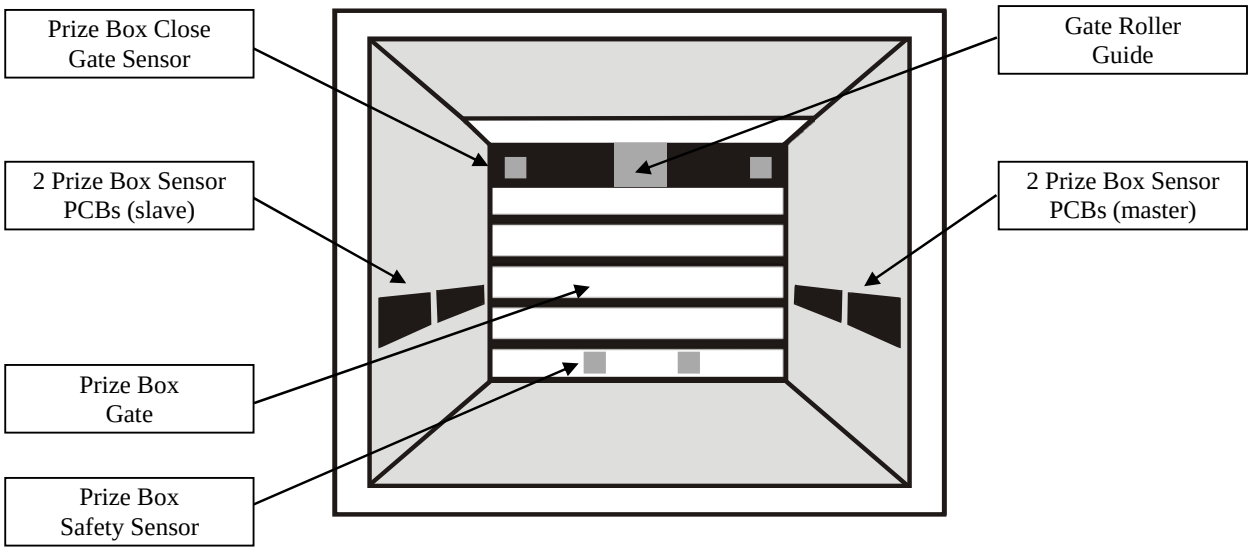

Inside Right Prize Box as viewed from rear

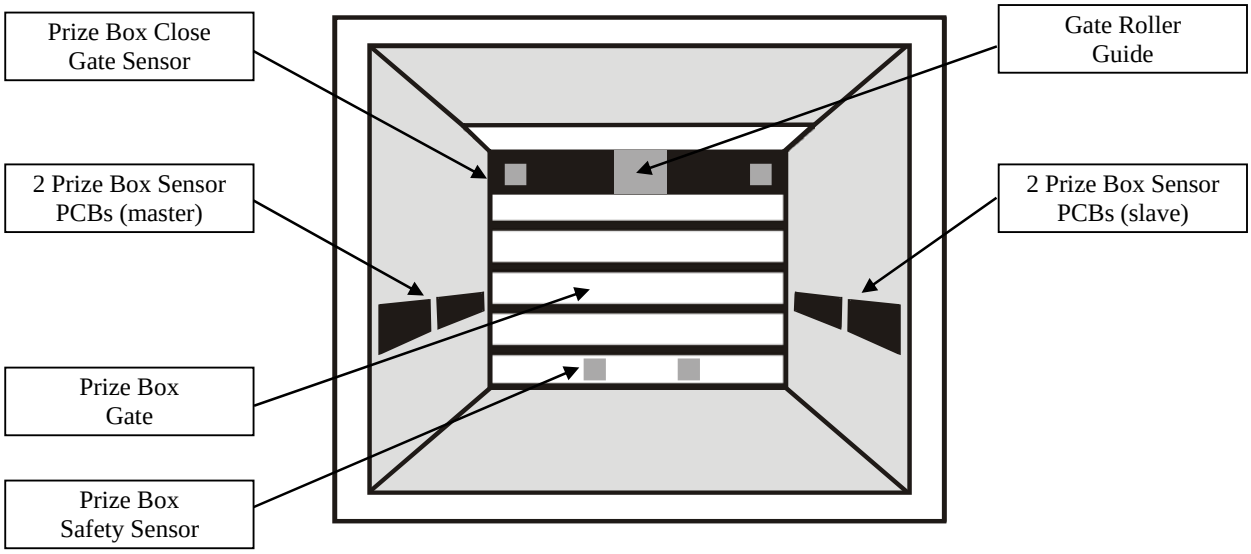

PARTS DESCRIPTION

■ COIN MECHANISMS

The coin mechanisms can be accessed inside the coin door on the left front of control panel assembly.

■ CASH BOX

The cash box is located inside the coin door on the front of the control panel assembly.

■ MINOR PRIZE DOOR

The Minor Prize door is located on the right front of the control panel assy.

■ GAME CONTROLS:

Located at the upper center of the control panel assembly. The control panel can be accessed through the rear door or via the coin door.

START/STOP BUTTON: The Start button is the large RED round illuminated button. This button is used to start / stop during a game and for test and program adjustments.

CONTINUE BUTTON: The Continue button is the rectangular illuminated button located at the right-hand side of the control panel. This button is used to continue the game if player want to try for a Major prize.

SELECT BUTTON: The Select button is the rectangular illuminated button located at the left-hand side of the control panel. The select button is used to step through the prize arms if a major prize is won.

■ SERVICE CONTROLS I

Located on the service panel mounted on top of the cash box and accessed through the coin door.

CLOSE BUTTON: Used to close the prize box gates manually.

OPEN BUTTON: Used to open the prize box gates manually.

VOLUME KNOB: Used to adjust the speaker's sound level.

GATE TEST BUTTON: Used to activate the gate test.

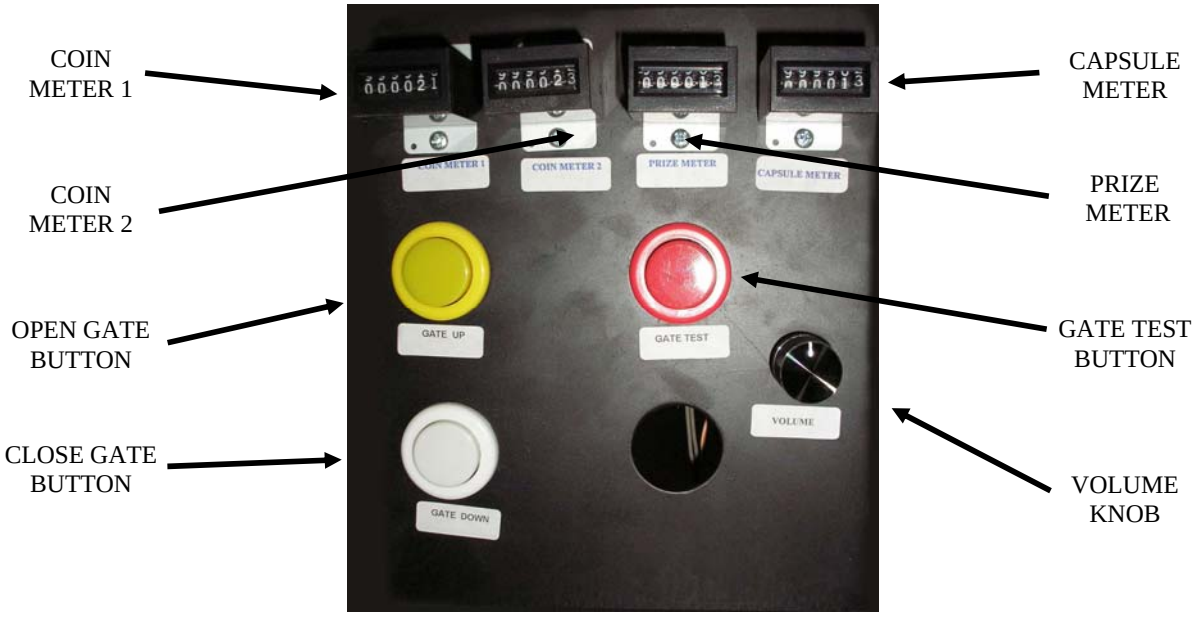

■ SERVICE CONTROLS II

Located at the upper part of the coin door. Access is through the coin door.

SERVICE BUTTON: Used to input credits to the game without activating the coin counter, and to perform test procedures in combination with the test button.

TEST BUTTON: Used to perform the test mode, in combination with the Service button.

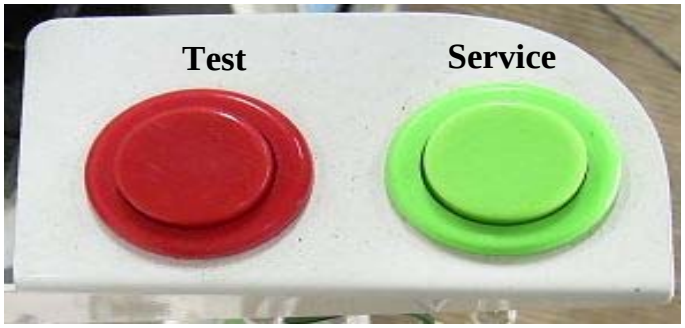

■ POWER CORD

The power cord is a standard IEC power cord (as used on computers) that is plugged in to the power inlet socket at the rear of the machine. The power cord can be removed for transport.

■ POWER INLET

The power inlet is located at the rear of the machine on the Left-hand side as viewed from the rear. It is a standard IEC inlet socket.

■ MAINS SWITCH

The mains switch is located on the power inlet assembly along with the mains fuse, and IEC inlet socket.

■ FUSES

For locations of all fuses refer to Fuses and Fuse location, page 42 of this manual.

*** WARNING! ***

Always *turn* ***OFF*** *Mains power and unplugged the game, before replacing any fuses*

Always *use the correct rated fuse. Refer to page 34 for fuse information.*

■ 7-SEG DISPLAY

There is a 4-digit display located on the control panel. Access is through the back of the control panel assy.

■ PCB's

For location of all game PCB's, refer to the Parts Location diagram page 44 of this manual.

■ SPEAKERS

Two speakers are located at the upper part of the control panel assembly. Access is through the rear door of the control panel assembly.

■ POWER SUPPLY

The power supply is located at the back of the cabinet and is accessed from the rear of the machine. It is a 12V 13A switching power supply.

■ DOWN LIGHT TRANSFORMER

The down light transformer is located at the back of the cabinet and is accessed from the rear of the machine. It is 2 x 12VAC 5A supply output.

■ MAJOR PRIZE ARMS

The prize arm mechanisms are located at the back of the cabinet and are accessed from the rear of the machine.

■ CAPSULE DISPENSER ASSY

It is located at the back of the machine main cabinet and is accessed from the rear of the machine.

LAMPS

*** WARNING! ***

Always *turn* ***OFF*** *Mains power and unplugged the game, before replacing any lamps.*

Always *allow time for cooling as Lamps that have been active for a time may still be too hot to touch.*

■ COIN DOOR LAMPS

The coin door lamps all are 12V/DC GE192 or equivalent and can be accessed through the coin door.

■ BUTTON LAMPS

The button lamps all are 12V/DC GE192 or equivalent and can be accessed through the coin door or back door.

■ HEADER LAMPS

There are three standard FL 15 fluorescent tubes for the Header Display. Access is by the removing of the machine header cover and accessing the tube from the front.

■ PRIZE DISPLAY SIDE LAMPS

There are two standard FL 40 fluorescent tubes for side lighting the prize display. Access is by the removing of the Lamp Brackets and accessing the tubes from the center back door.

■ PRIZE DISPLAY DOWN LAMPS

There are 5 x 12V 20W 36Dgr-halogen lamps mounted in the top of the prize display. These are standard diachronic lamps and are accessed from the prize display through the prize display door.

*** CAUTION! ***

Always *replace the lamps with the same or equivalent size, wattage and voltage.*

MAINTENANCE

CLEANING AND CHECK UP

■ EXTERIOR

Regularly dust and clean the external cabinet areas as required, using a soft water-damp cloth and mild soap. Check for blown bulbs and replace as required.

Any scratches or marks in the fiberglass or acrylic can be buffed out using car polish or cut and polish.

*** CAUTION! ***
Do not *use solvents on the panels as it may affect the artwork.*

■ INTERIOR

Regularly dust and vacuum the interior of the cabinet, taking care to remove any objects that may have fallen on the PCBs. Check and tighten all fixing hardware and fasteners as required.

*** WARNING! ***
Always *turn* ***OFF*** *Mains power and unplugged the game, before cleaning the interior of the machine.*

Always *after cleaning the cabinet interior, check all harness connectors and restore all loose or interrupted connections.*

Regularly check that all the Display and Button Lamps are operating through the Sounds, Lamps and Display Test *(See page 16)*. Replace any globes that are not operational.

Regularly check the level of capsules in the *Capsule Dispenser* and refill as necessary.

SECTION B: TECHNICAL DETAILS

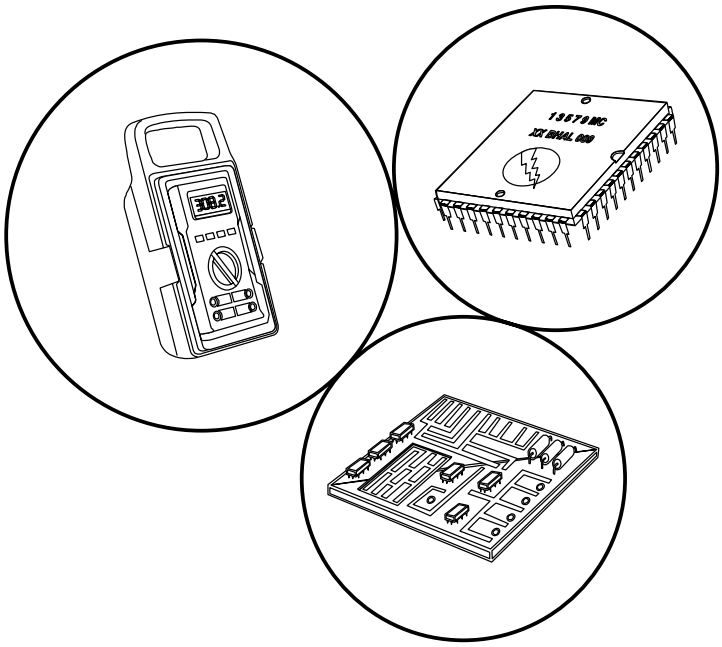

It is advised that anybody using SECTION B for repairing or modifying any of the components of the game should be a qualified technician, having at least a basic knowledge of digital components, integrated circuits and electricity.

B

MAINS VOLTAGE ADJUSTMENT

■ POWER SUPPLY

The Switch Mode Power Supply has a switch to set the mains voltage range. It is located at the rear of the game cabinet, and is accessed via the back door. Use a thin blade screwdriver to move the selector switch to the desired mains voltage (See Diagram Below)

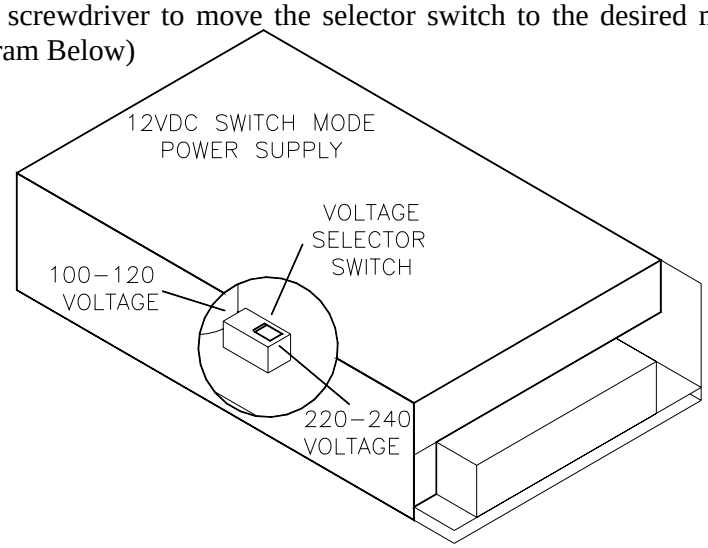

■ FLORESCENT TUBE BALLASTS AND STARTERS

Locate the florescent tube ballasts and starters in the back of the cabinet. If unsure of the location of any ballasts or starters, refer to Parts location diagram on page 44 of this manual. These have to be removed and replaced with an equivalent wattage at you local mains voltage level.

■ TRANSFORMER CONNECTORS

Locate the machine transformer(s) in the base of the cabinet. If unsure of the location of the transformer(s), refer to Parts location diagram on page 44 of this manual. Change the position of the 'ACTIVE' or 'HOT WIRE' input, (marked brown on the diagram), to the position for the desired mains voltage. (See Diagram Below)

6 WAY CONNECTOR PINOUT

PIN	FUNCTION
1	240VAC
2	220VAC
3	120VAC
4	110VAC
5	0VAV (NEUTRAL)
6	EARTH

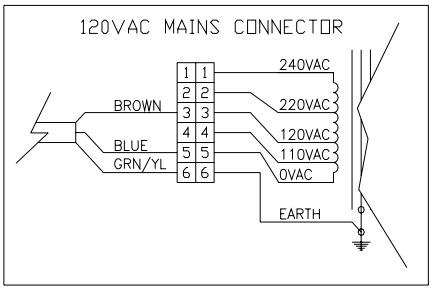

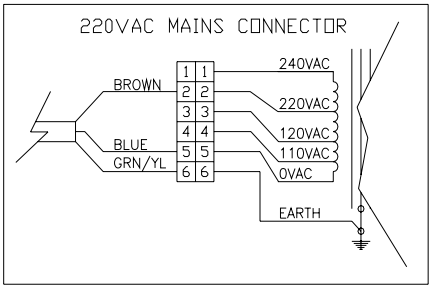

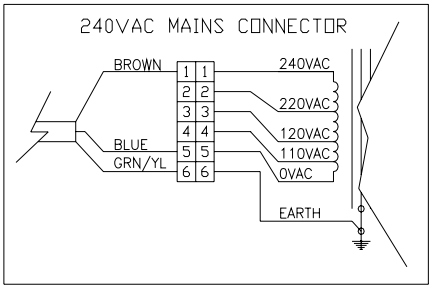

STACKER GIANT 3D EXPLODE VIEW

NO	PART NO	DESCRIPTION	QTY
01	STG A007	HEADER ASSEMBLY	1
02	STG-SA-59-R0	HEADER SIDE ASSEMBLY	1R,1L
03	STG-SA-58-R0	L BRACKET SLIDE	2
04	STG-FW-12-R0	TOP PANEL	1
05	STG E004	DISPLAY PANEL ASSEMBLY	1
06	STG A006	PRIZE PANEL ASSEMBLY	1R,1L
07	STG-SA-09-R0	FRONT DOOR FRAME ASSEMBLY WITH GLASS	1R,1L
–	STG-FG-02-R0	SIDE GLASS	2
08	STG-FW-68-R0	TOP FRONT BALL CONTAINER	1R,1L
09	STG-FW-66-R0	OUTSIDE PRIZE CHUTE	1R,1L
10	STG A010	COVER SIDE ASSEMBLY	1R,1L
–	STG-SA-07-R0	COVER SIDE METAL ONLY	1R,1L
–	AT3314	STICKER FRONT R/L CABINET	1
11	STG-FW-69-R0	BALL CONTAINER TOP	1
12	STG A009	SIDE PANEL ASSEMBLY	1R,1L
–	STG-FW-04-R0	SIDE PANEL WOOD ONLY	1R,1L
–	AT3311	STICKER SIDE R/L	1
13	STG-FW-63-R0	INSIDE PRIZE CHUTE	1R,1L
14	HW0016	CASTOR 2" DOUBLE SWIVEL	6
15	HW0002	RUBBER MOUNTING	4
16	STG A004	ROLLING DOOR ASSEMBLY	1R,1L
17	STG E007	MAIN POWER ASSEMBLY	1
18	STG-SA-67-R0	CAPSUL CHUTE ASSEMBLY	1
19	STG A003	CAPSUL DISPENCER 3" ASSEMBLY	1
20	STG E009	PANEL PCB ASSEMBLY	1
PART ITEM			
–	STG-FW-05-R0	PCB BASE WOOD	1
–	BAFB66A	PCB FB66A MPU CONTROLLER BBB LH	1
–	BAFB52C	PCB FB52C 16Mhz Z80 SOUND BOARD	1
–	BA0029	PCB FB29 STEREO AUDIO AMPLIFIER	1
–	BA0005	PCB TICKET INTERFACE WITH METER DRIVE	1
–	BAFB95	PCB FB95 PRIZE BOX CONTROLLER BOARD	1
21	STG A005	CONTROL PANEL ASSEMBLY	1
22	STG E009	DB BOX ASSEMBLY	1
PART ITEM			
–	STG E009a	DB BOX METAL ONLY	1
–	EA1356	BINDING POST	1
–	EA1358	SPLIT CORE EMIFILTER FOR CE MACHINE	1
–	EA0649	IEC TYPE NOISE EMI FILTER	1
–	STG H007	DB BOX HARNESS	1
–	EA0635	POWER LEAD MOLDED IEC TO 3 PIN USA	1
–	EA0636	POWER LEAD MOLDED IEC TO 2 PIN INDO	1
–	EA0637	POWER LEAD MOLDED IEC TO 3 PIN AU	1
–	EA0639	POWER LEAD MOLDED IEC TO 3 PIN UK	1

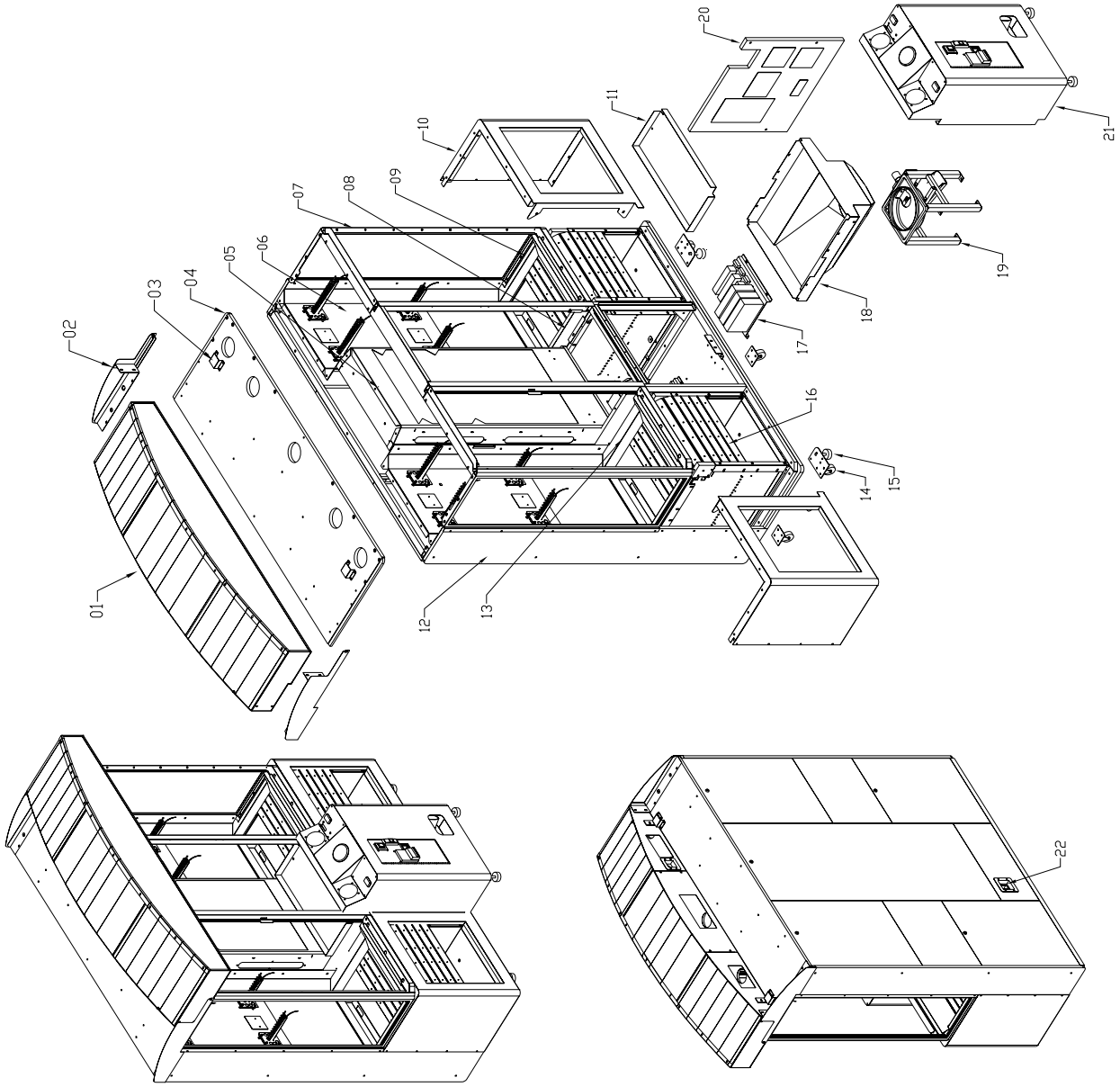

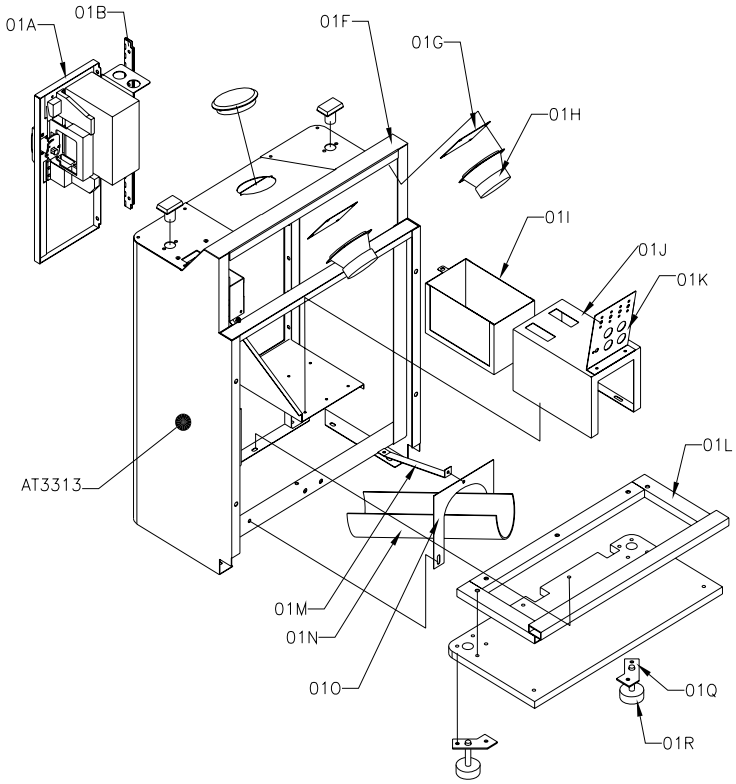

01. CONTROL PANEL ASSEMBLY

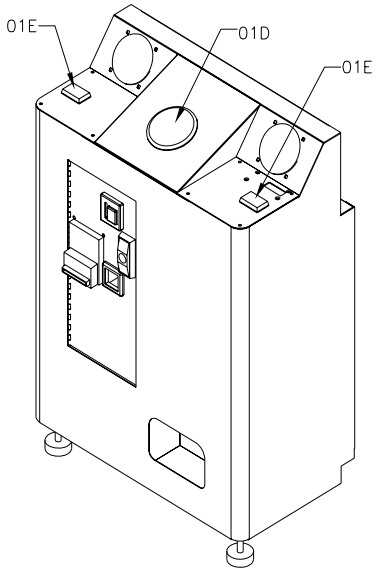

NO		CODE	DESCRIPTION	QTY
01		STG A005	CONTROL PANEL ASSEMBLY	1
PART ITEM	01A	ST A002	COINDOOR 1 DBA, 1 SLOT	1
	01B	ST-FM-51-R1	COINDOOR HINGE	1
	01C	EA0545	SWITCH RECTA BLUE BUTTON WITH LAMP	1
	01D	EA0523	SWITCH LARGE RED MEGA BUTTON	1
	01E	EA0507	SWITCH RECTA GREEN BUTTON WITH LAMP	1
	01F	STG-SA-16-R0	CONTROL PANEL BOX	1
	01G	STG-FM-23-R0	SPEAKER GRILL	2
	01H	EA1201	SPEAKER 4" 8 ohm 40W	2
	01I	ST-SA-59-R0	CASH BOX	1
	01J	ST-SA-60-R0	HOUSING CASH BOX	1
	01K	STG E001	SERVICE PANEL ASSEMBLY	1
	SUB	STG-FM-77-R1	SERVICE BRACKET	1
		EA1252	COIN COUNTER 12V REAR MOUNTING	4
		EA0520	SWITCH SMALL ROUND GREEN BUTTON	2
		EA0519	SWITCH SMALL ROUND RED BUTTON	2
		EE0689	POTENSIO CARBON DUAL GANG 50 K OHM	1
		STG H002a	SERVICE PANEL HARNESS	1
	01L	STG-SA-21-R0	SMALL FRAME	1
	01M	STG-FM-18-R0	COUPLE	1
	01N	STG-FM-88-R0	DISPENCER FUNEL	1
	01O	STG-FM-20-R0	DUCK END HOLDER	1
	01P	STG-FW-06-R1	CONTROL PANEL BASE	1
	01Q	STG-FM-90-R0	MOUNTING BASE	2
	01R	HM0002	RUBBER MOUNTING	2
	–	STG H002	CONTROL PANEL HARNESS	1
	–	AT3313	STICKER FRONT MIDDLE CABINET	1
	–	AT3312	STICKER ACRILLIC PLAY INSTRUCTION	1
02		ST A002	COINDOOR 1 DBA 1 SLOT ASSY	1
PART ITEM	02A	HM0004	LOCK ANGLE	1
	02B	ST-FM-53-R0	THANDLE COVER	1
	02C	ST-SA-11-R0	COIN DOOR DBA METAL ONLY	1
	02D	EA1109	DOLLAR BILL ACCEPTOR	1
	02E	HM0014	COIN MECHANISM	1
	02F	EA0520	SWITCH SMALL ROUND GREEN BUTTON	1
	02G	EA0519	SWITCH SMALL ROUND RED BUTTON	1
	–	ST H002	COINDOOR 1 DBA 1 SLOT HARNESS	1
	–	AT3313	STICKER FRONT MIDDLE CABINET	1

02. COIN DOOR 1 DBA, 1 SLOT

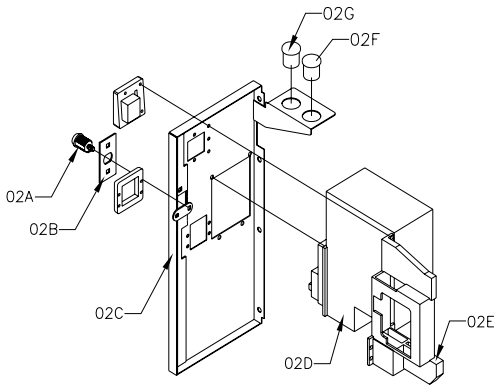

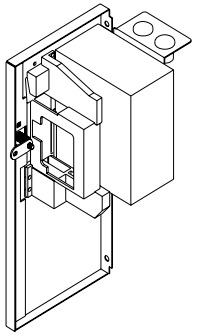

OPTIONAL PARTS

–		ST A002a	COINDOOR DOUBLE SLOT ASSY	1
PART ITEM	–	HM0004	LOCK ANGLE	1
	–	ST-FM-53-R0	THANDLE COVER	1
	–	ST-SA-61-R0	COIN DOOR DBA METAL ONLY	1
	–	EA1109	DOLLAR BILL ACCEPTOR	1
	–	HM0014	COIN MECHANISM	1
	–	EA0520	SWITCH SMALL ROUND GREEN BUTTON	1
	–	EA0519	SWITCH SMALL ROUND RED BUTTON	1
	–	ST H002a	COINDOOR DOUBLE SLOT HARNESS	1
	–	AT3313	STICKER FRONT MIDDLE CABINET	1

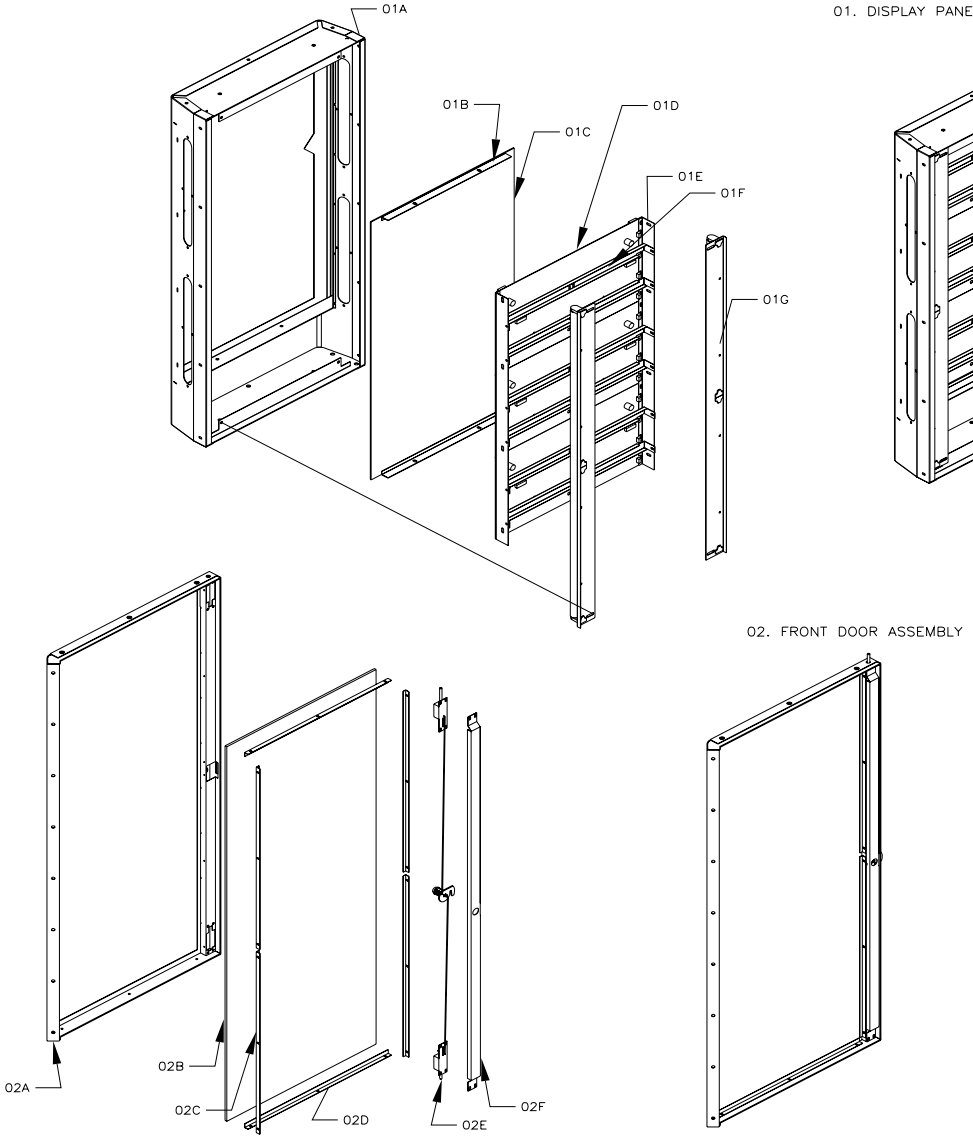

NO		PART NO	DESCRIPTION	QTY
01		STG E004	DISPLAY PANEL ASSEMBLY	1
PART ITEM	01A	STG E004a	DISPLAY BOX WITH SIDE ACRILLIC	1
	01B	STG-FM-53-R0	LIST ACRILLIC DISPLAY	2
	01C	STG-FP-10-R0	DISPLAY ACRILLIC	1
	01D	BAFB96	PCB FB96 LED DISPLAY	3
	01E	STG-FM-50-R0	LED PCB BRACKET	1R, 1L
	01F	STG-FM-52-R0	PCB STRANGHTER	6
	01G	STG E005	DISPLAY LIGHT ASSEMBLY	2
	SUB	STG-FM-36-R0	DISPLAY LAMP BRACKET	2
		EA0243	NEON 40W COOL WHITE	2
		EP 0434	END CAP HOLDER MODEL 713-HS	8
	–	AT3317	STICKER DISPLAY COMPLETE	1
02		STG A011	GLASS DOOR ASSEMBLY	1
PART ITEM	02A	STG-SA-15-R0	DOOR FRAME METAL ONLY	1
	02B	STG-FG-03-R0	FRONT GLASS	1
	02C	STG-FM-83-R0	GLASS BRACKET H	4
	02D	STG-FM-82-R0	GLASS BRACKET	2
	02E	STG A012	TRIPLE LOCK ASSEMBLY	1
	02F	STG-FM-86-R0	TRIPLE LOCK COVER	1

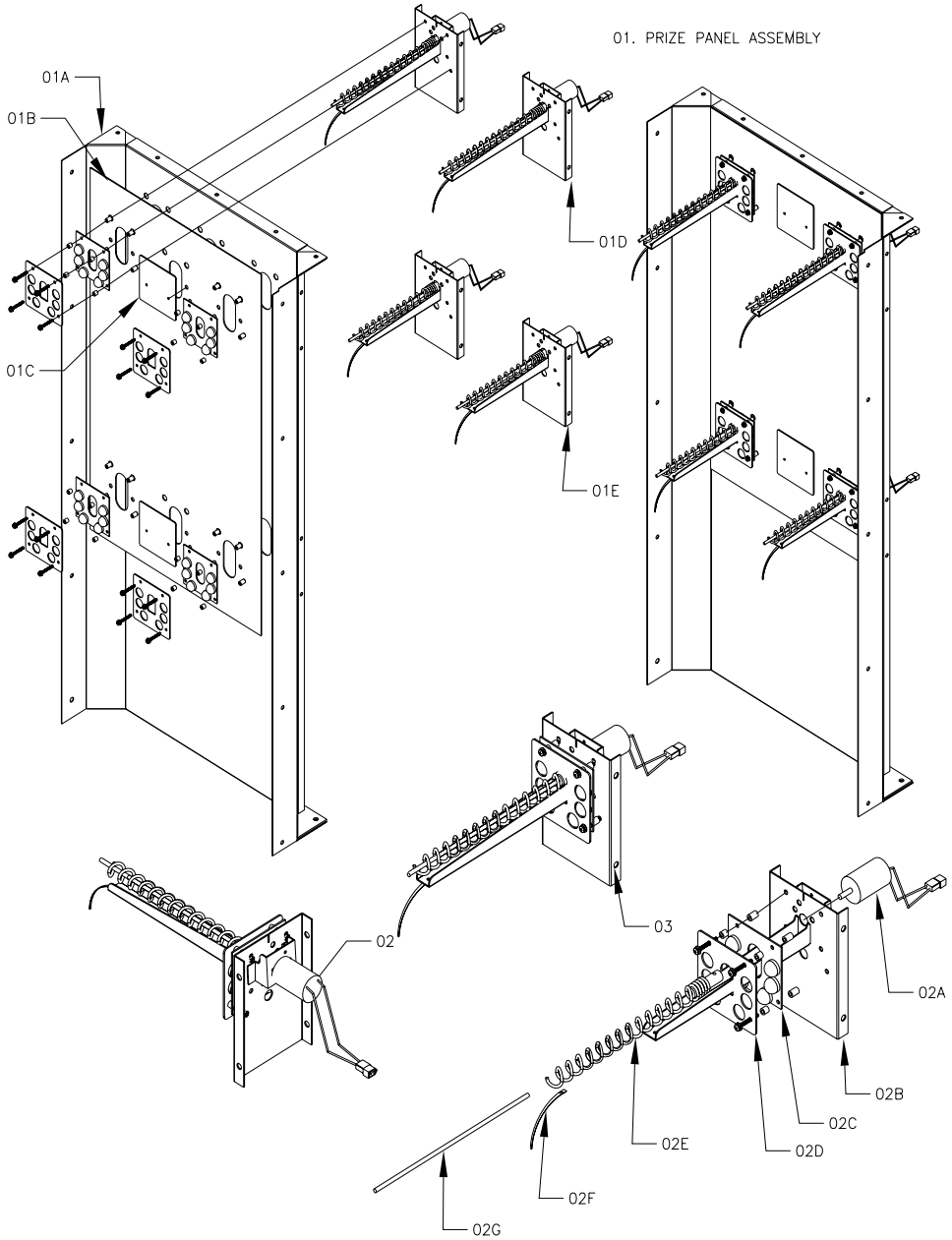

NO		PART NO	DESCRIPTION	QTY
01		STG A006	PRIZE PANEL ASSEMBLY	1
PART ITEM	01A	STG-SA-24-R0	PRIZE PANEL METAL ONLY	1
	01B	STG-FP-15-R0	PRIZE PANEL MIRROR	1
	01C	STG-FP-14-R0	MIDDLE LED MIRROR	2
	01D	STG E002	PRIZE ARM UPPER ASSEMBLY	2
	01E	STG E003	PRIZE ARM LOWER ASSEMBLY	2
	–	AT3316	STICKER PRIZE ARM BACKGROUND	2
02		STG E002	PRIZE ARM UPPER ASSEMBLY	1
PART ITEM	01A	EA1155C	12VDC MOTOR JM 300-3259	1
	01B	STG-SA-25-R0	PRIZE ARM UPPER METAL ONLY	1
	01C	BAFB77B	PCBFB77B WITH 6 LED INTO ONE PCB	1
	01D	STG-FP-03-R0	MIRROR LED PANEL	1
	01E	EA1155F	PRIZE DISP ARM SPIRAL, 16.5 +/-1.5 ROT	1
	01F	EA1155E	PRIZE DISP ARM TONGUE SLIDE	1
	01G	EA1155D	PRIZE DISP ARM LOCKING PIN LENGHT,28 CM	1
	–	AT3318	STICKER MJOR MINOR PRIZE FOR STK GIANT	1
02		STG E003	PRIZE ARM LOWER ASSEMBLY	1
PART ITEM	01A	EA1155C	12VDC MOTOR JM 300-3259	1
	01B	STG-SA-26-R0	PRIZE ARM LOWER METAL ONLY	1
	01C	BAFB77B	PCBFB77B WITH 6 LED INTO ONE PCB	1
	01D	STG-FP-03-R0	MIRROR LED PANEL	1
	01E	EA1174F	PRIZE DISP ARM SPIRAL MEDIUM, 21 ROT	1
	01F	EA1155E	PRIZE DISP ARM TONGUE SLIDE	1
	01G	EA1155I	PRIZE DISP ARM LOCKING PIN SMALL,22.5 CM	1
	–	AT3318	STICKER MJOR MINOR PRIZE FOR STK GIANT	1

NO	CODE	DESCRIPTION	QTY
01	STG E007	MAIN POWER ASSEMBLY	1
01A	EA0015	POWER SUPLY S-150-12 SINGLE OUTPUT	1
01B	EA0013	POWER SUPLY S-100-F-5 SINGLE OUTPUT	2
01C	EA03030	NEON BALLAST 110-240VAC 40W	2
01D	EA0311	STARTER BASE UL	2
01E	STG-FM-76-R0	LOWER TRAFO BRACKET	1
02	STG A003	CAPSUL DISPENCER ASSEMBLY	1
02A	HA2090-STK GAT	CAPSUL DISPENCER 3" IN SET	1
02B	STG-FM-71-R2	INLET DUCK	1
02C	STG-SA-70-R1	CAPSUL DISPENCER LEG	1
02D	STG-FM-72-R0	CAPSUL DISPENCER MOTOR BRACKET	1
02E	STG-FM-75-R0	ADAPTER SHAFT	1
02F	EA1158	MOTOR 8000DC 12VDC 10-18 RPM	1
02G	STG-FM-73-R1	BRACKET SWITCH	1
02H	EA0403	SWITCH COIN MICRO WITH WIRE	1
-	STG H001	CAPSUL DISPENCER 3" HARNES	1

PART ITEM

01. MAIN POWER ASSEMBLY

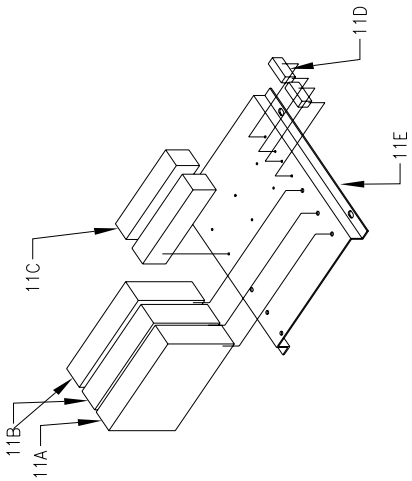

02. CAPSUL DISPENCER ASSEMBLY

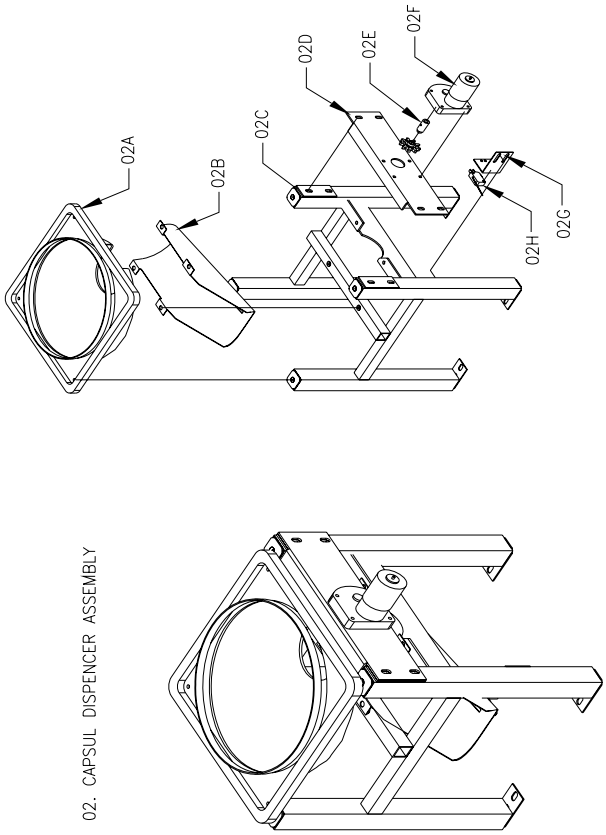

NO		CODE	DESCRIPTION	QTY
01		STG A004	ROLLING DOOR ASSEMBLY	1
PART ITEM	01A	STG A002	DRIVEN MECHANISM ASSEMBLY	1
	01B	EA0406	MICROSWITCH LEVER 51mm WITH BRACKET	2
	01C	BAFB89a	PCB FB89a SENSOR MASTER	2
	01D	STG A001	ROLLING DOOR COVER	1
	01E	BAFB89b	PCB FB89b SENSOR SLAVE	2
	–	STG H003	ROLLING DOOR HARNESS	1
	–	AT3319	STICKER PRIZE DOOR	2
02		STG A001	ROLLING DOOR ALMUNIUM	1
PART ITEM	02A	STG A001a	ALMUNIUM STRIP	1
	02B	STG-FM-46-R2	SWITCH KNOKER ARM	1R,1L
	02C	EA0410	MICROSWITCH LEVER SMALL	2
	02D	STG-FM-36-R0	SLIDING PLATE	1
	02E	HM2958	ROLL DOOR CHAIN	1
03		STG A002	DRIVEN MECHANISM ASSEMBLY	1
PART ITEM	03A	STG-SA-37-R0	DRIVEN MECHANISM BRACKET	1
	03B	HM2863	BEARING 6200ZZ	2
	03C	STG-FM-89-R0	DRIVER SPROCKET	1
	03D	STG-FM-81-R1	MOTOR BRACKET SPACER	4
	03E	STG-SA-40-R0	GEAR ASSEMBLY	1
	03F	STG-FM-38-R0	MOTOR BRACKET	1
	03G	EA1173	POWER WINDOW MOTOR 74R	1

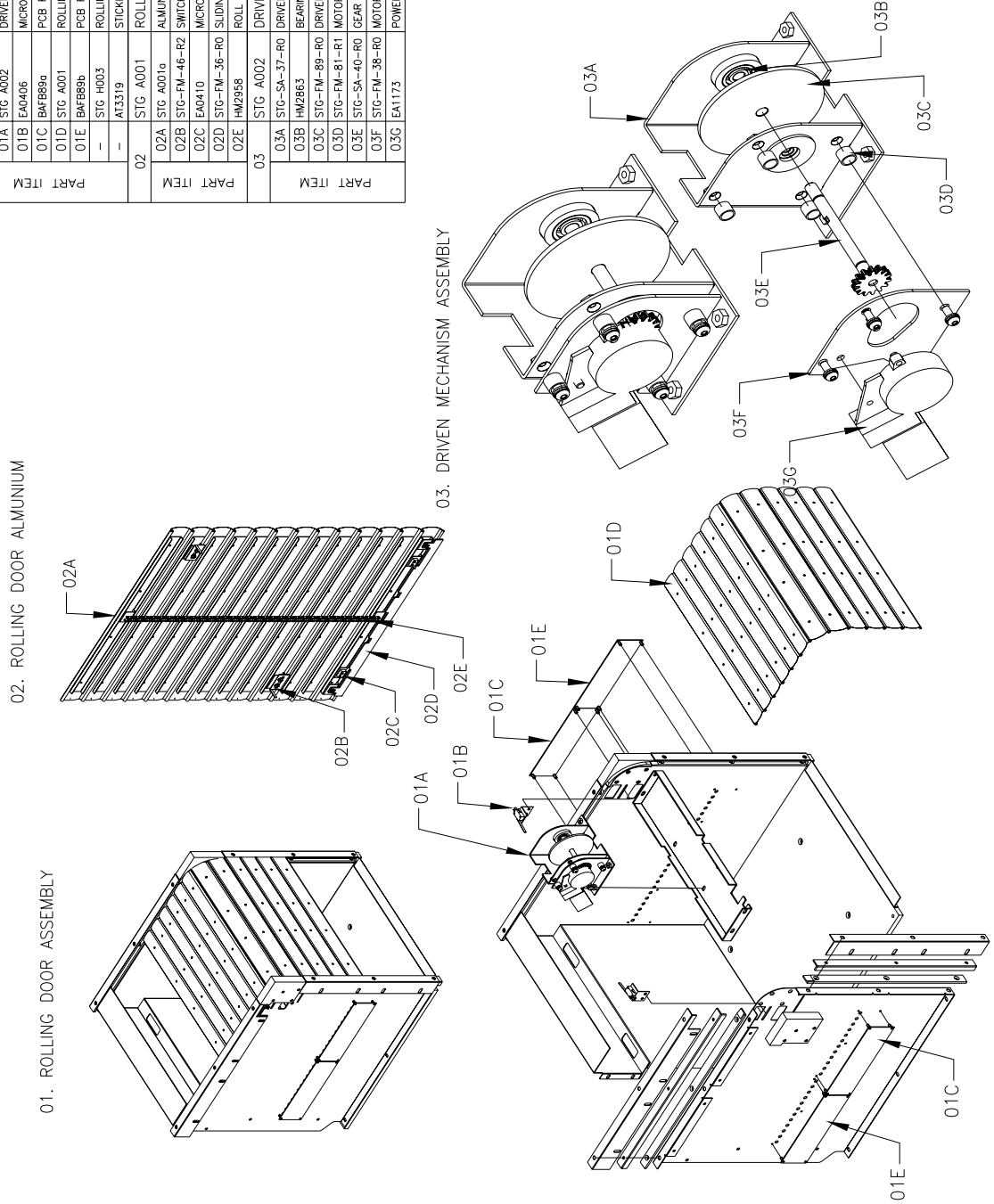

PART ITEM	NO	PART NO	DESCRIPTION	QTY
	01	STG A007	HEADER ASSEMBLY	1
	01A	STG-SA-54-R0	HEADER ASSEMBLY METAL ONLY	1
	01B	STG-FM-55-R0	METAL TOP LIST	1
	01C	STG A008	HEADER LIGHT ASSEMBLY	3
SUB		STG-FM-60-R0	HEADER LAMP BRACKET	6
		EA0206	NEON 18W COOL WHITE	3
		EP0434	END CAP HOLDER MODEL 713-HS	6
	01D	STG-FM-57-R0	L BRACKET SUPPORT	2
	01E	STG-FM-56-R0	HEADER BACK MIDDLE	1
	01F	STG A013	POWER INLET ASSEMBLY	1
SUB		STG-FM-61-R0	POWER INLET BRACKET	1
		EA0642	SOCKET AC 3 MALE (CAROUSEL)	1
	01G	STG E006	HEADER POWER ASSEMBLY	1
	01H	STG-FM-91-R0	DOWNLIGHT BRACKET	5
	01I	AT3315	STICKER ACRILLIC TOP HEADER	1
	01J	HA0001ST	DOWNLIGHT ASSEMBLY	5
	–	STG H004	HEADER HARNESS	1
	02	STG E006	HEADER POWER ASSEMBLY	1
	02A	STG-FM-62-R0	TRAFO BRACKET	1
	02B	EA0311	STARTER BASE UL	3
	02C	EA0815	TRANSFORMER WITH CONECTOR	1
	02D	EA0042	FUSE HOLDER	2
	02E	EA0614	TERMINAL BASE UL	1
	02F	EA0325	BALLAST 240V, 15W	3

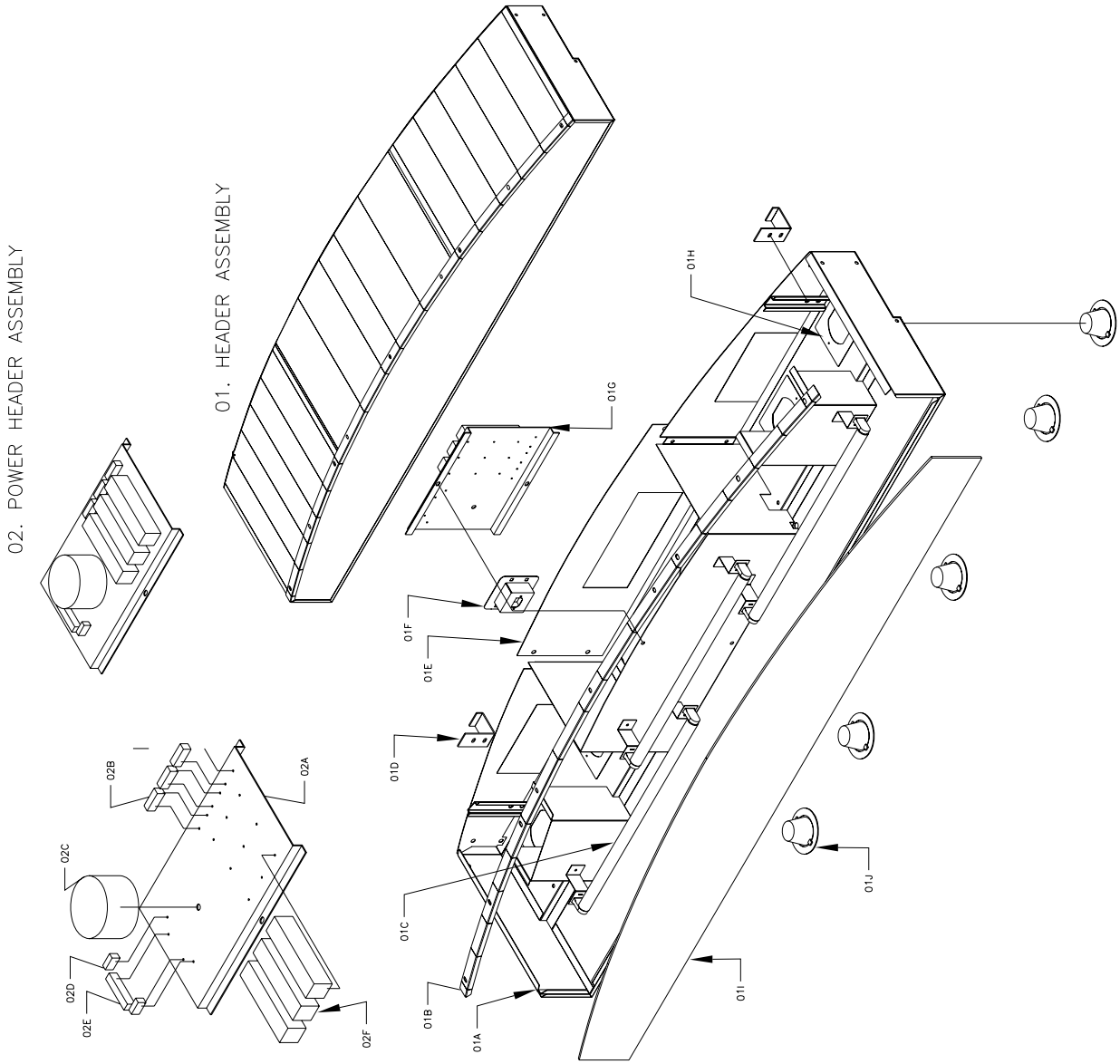

STACKER GIANT MAIN WIRING DIAGRAM

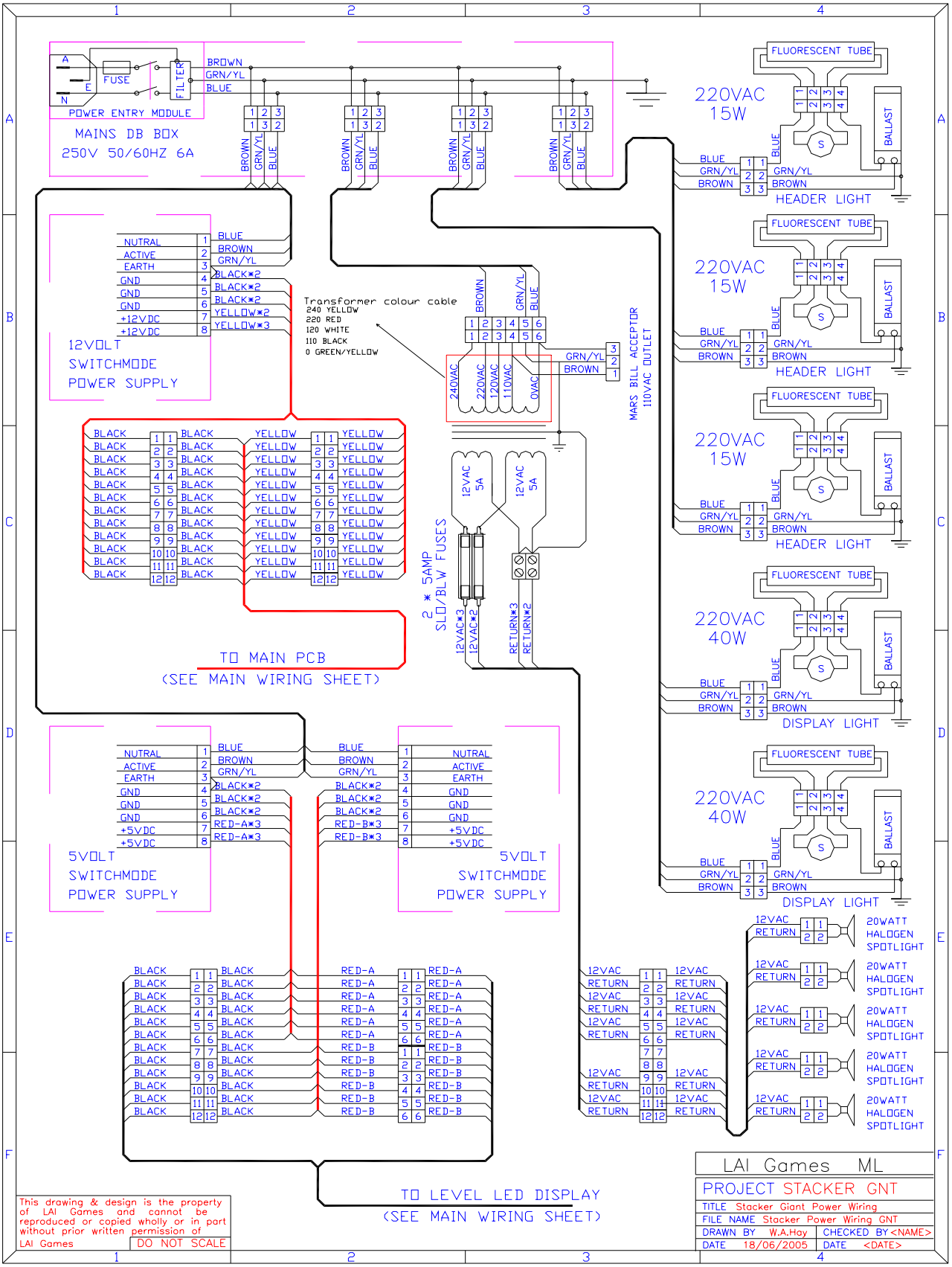

STACKER GIANT POWER WIRING DIAGRAM

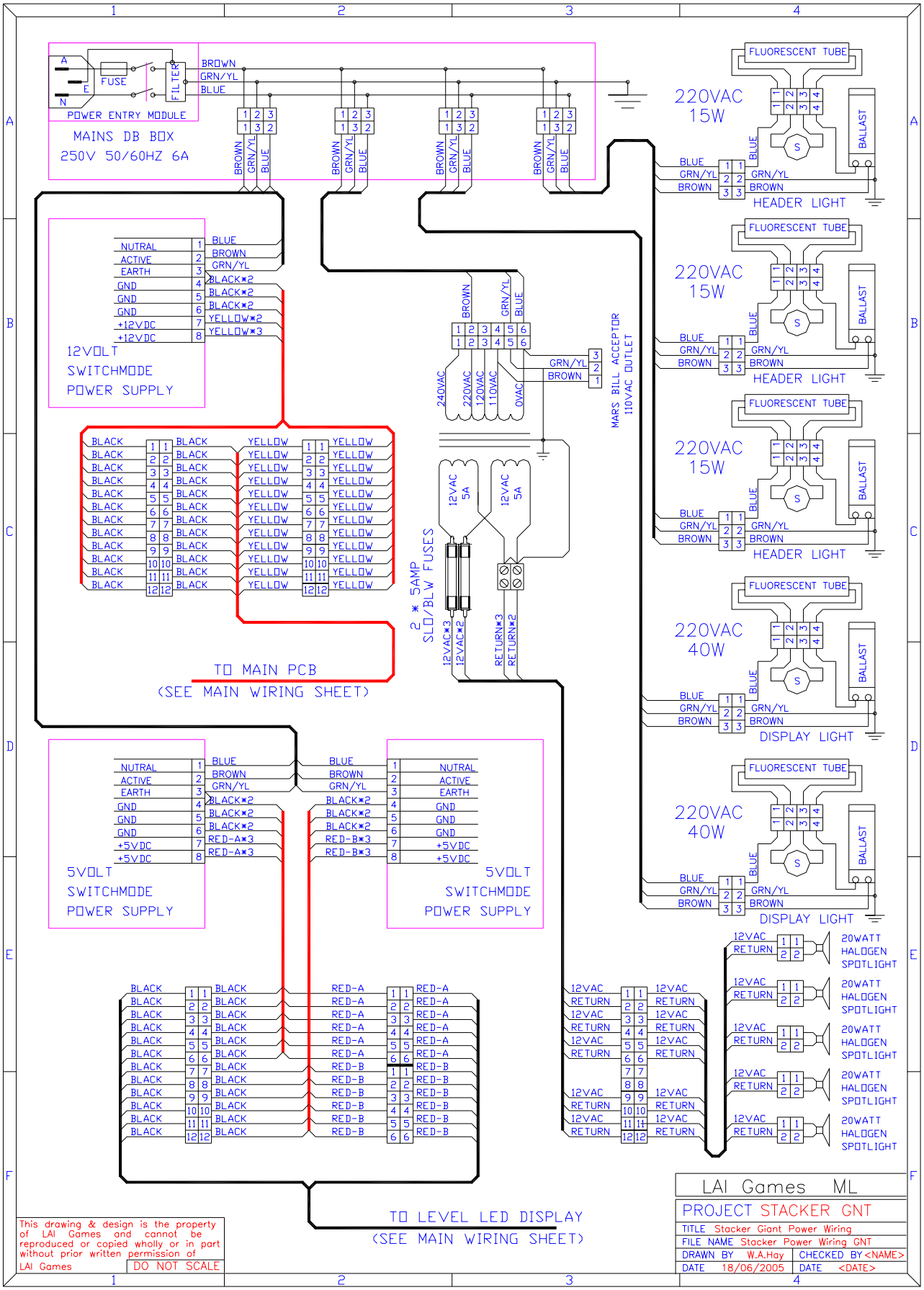

STACKER GIANT CONTROL WIRING DIAGRAM

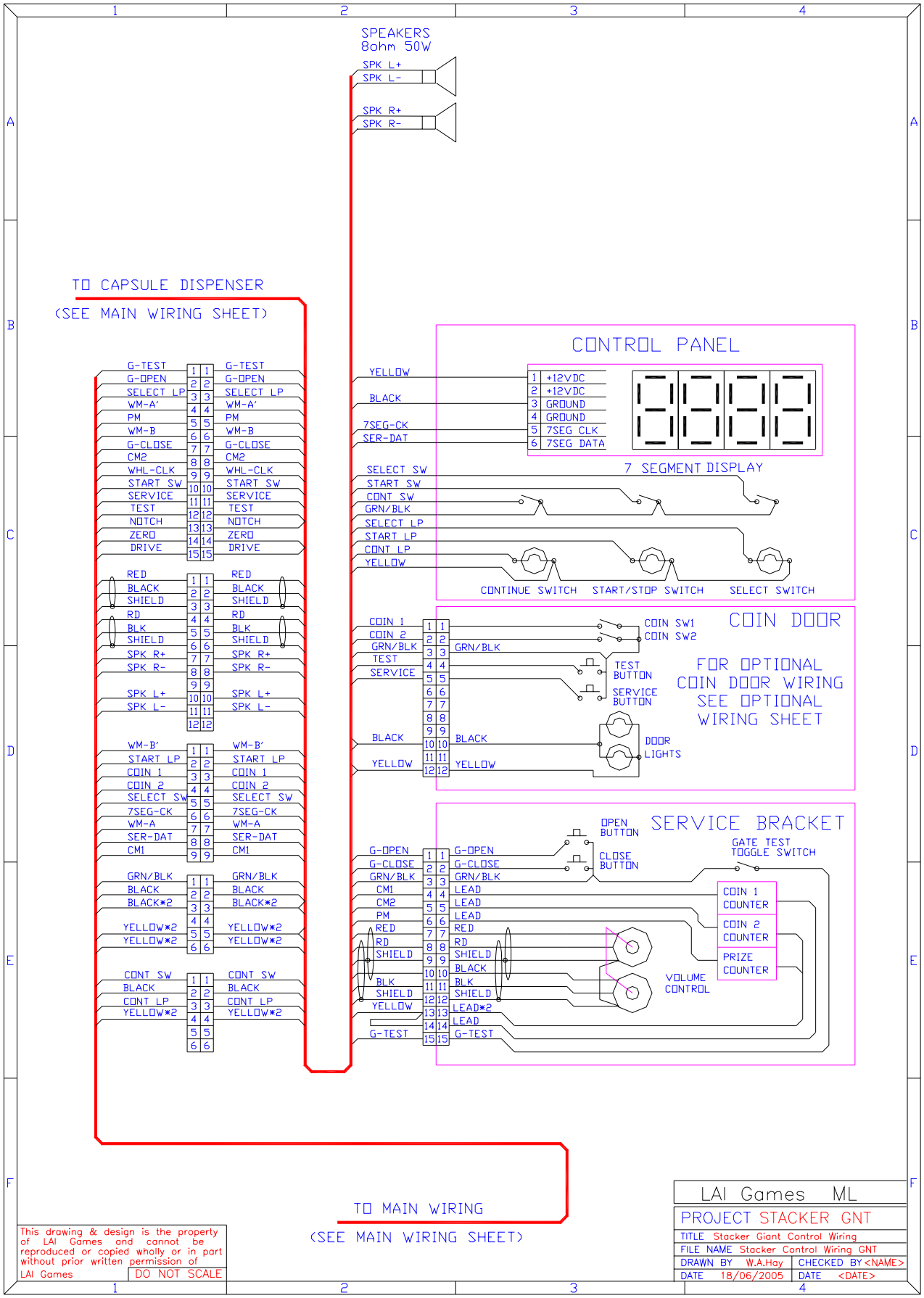

STACKER GIANT OPTIONAL WIRING DIAGRAM

(OPTIONAL)
WIRING FOR MERCY TICKET KIT

NOT AVAILABLE FOR STACKER GIANT AS THE CAPSULE DISPENSER IS FACTORY FITTED.

OPTIONAL MERCY CAPSULES CAN BE DISPENSED FOR NON WINNING GAMES VIA THE PROGRAM SETTINGS.

(OPTIONAL)
WIRING FOR COIN DOOR WITH
MARS BILL ACCEPTOR (AE-2411-U5)

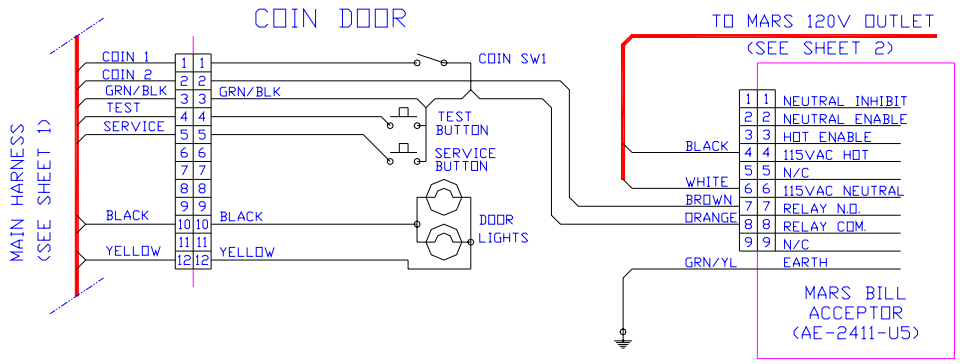

NOTE:-
1/- USE ONLY MARS BILL ACCEPTOR MODEL NUMBERS AE-2411-U2 TO AE-2411-U5 (200 TO 500 NOTE MAGAZINES) TO ALLOW COIN DOOR TO CLOSE
2/- MARS BILL ACCEPTOR MUST BE SET TO LONG PULSE OUTPUT (SEE MARS USER MANUAL FOR COUPON PROGRAMMING)

LAI Games ML	
PROJECT STACKER GNT	
TITLE Stacker Giant Optional Wiring	
FILE NAME Stacker Optional Wiring GNT	
DRAWN BY W.A.Hay	CHECKED BY <NAME>
DATE 18/06/2005	DATE <DATE>

WARRANTY

LAI GAMES warrants its manufactured products for a period of 3 months inclusive of parts and labor from the date of sale.

LAI GAMES exclusive obligation is to repair any item with any defects as a result of faulty workmanship or materials, providing the defective item or items of equipment are returned to the *LAI GAMES* distributor from which the machine was purchased.

LAI GAMES shall have no obligation to make repairs necessitated by negligence or interference to any component by any unauthorized personal. This will automatically void any existing warranty.

IF MAKING A WARRANTY CLAIM:

(g) A Copy of the sales invoice must accompany the claim.
(h) To and from Transport and freight costs are not covered by the warranty.
(i) Warranty is not transferable with the sale of a machine from one owner to another.

LAI GAMES
11 Chang Charn Road #04-03 Shriro House
Singapore 159640
Tel + 65 64792007 Fax +65 64799706
sales@laigames.com www.laigames.com

INTERNATIONAL SALES & SERVICE

Sales/Enquiries: sales@laigames.com
Tech. Support: support@mleisure.co.id
Website: **www.laigames.com**

ISO 9001 CERTIFIED ORGANIZATION

URS

UKAS QUALITY MANAGEMENT 043-A

ISO 9001: 2000 Cert No.17460